Anchor Bay School District
Transportation Building

51880 Washington St.,
New Baltimore, MI 48047

Centrix Energy
792 Lois Dr.
Sun Prairie, WI 53590

Centrix

Centrix Energy
792 Lois Dr
Sun Prairie, WI 53590
(817) 506-8303

No.	Description	D

ANCHOR BAY
SCHOOL DISTRICT

DDC CONTROLS
UPGRADES

TRANSPORTATION
BUILDING

REQUEST FOR PROPOSAL

MECHANICAL
COVER SHEET

REQUEST FOR PROPOSAL
Project Number:
Date: 4/06/202

M000

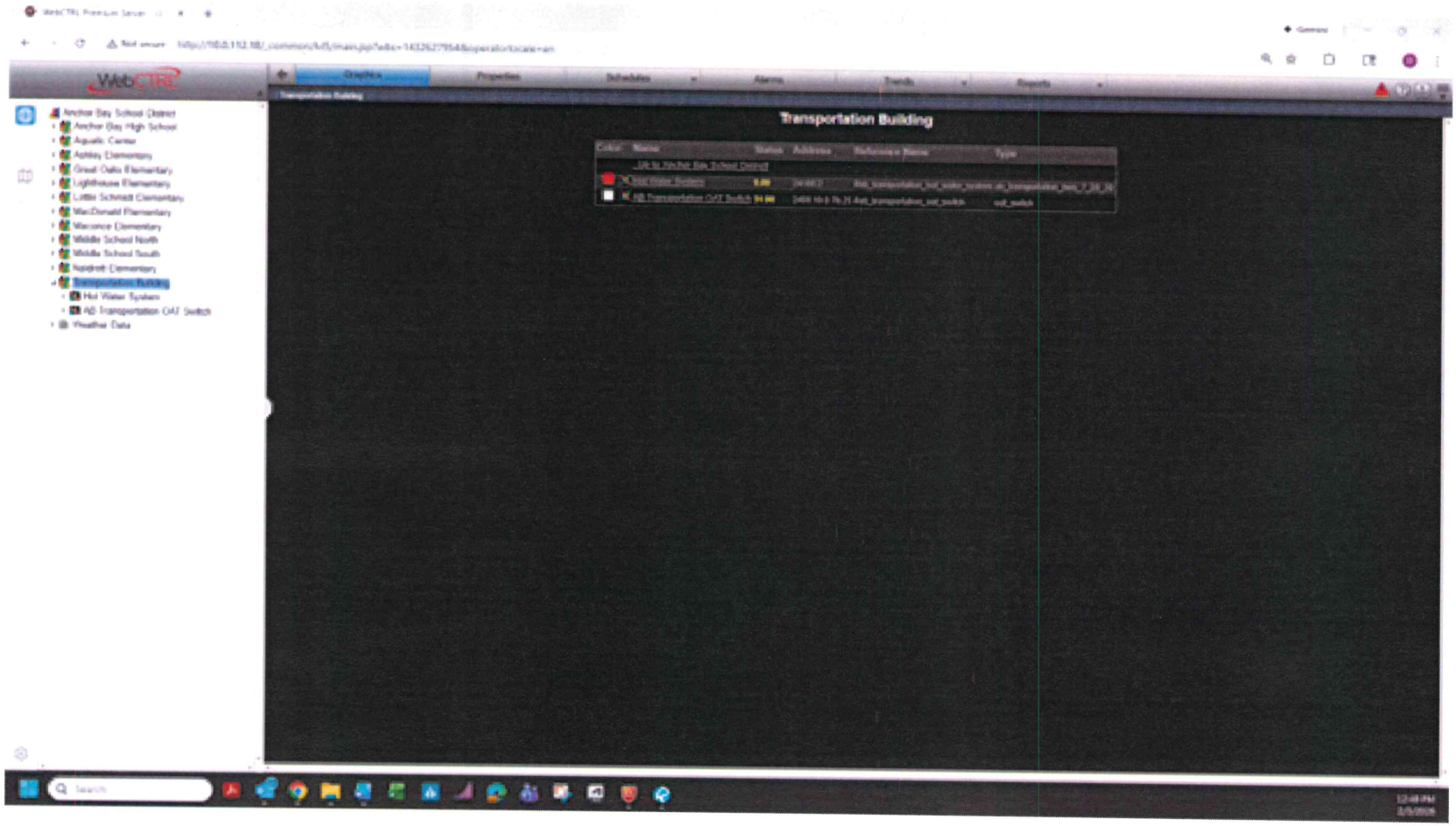

EXISTING DDC - ALC

Centrix

Centrix Energy
792 Lois Dr
Sun Prairie, WI 53590
(817) 508 8203

No.	Description	D

ANCHOR BAY SCHOOL DISTRICT

DDC CONTROLS UPGRADES

TRANSPORTATION BUILDING

REQUEST FOR PROPOSAL

EXISTING DDC - ALC

REQUEST FOR PROPOSAL
Project Number:
Date: 4/06/2

M001

Transportation Building

Item #	Area Served	Legacy Control's Page Number	Notes
BC-1	Office Area	4 of 9	Include (8)zones w/ RH coils
BC-2	Mezzanine	5 of 9	
ERU	Service Bays (garage area)	6 of 9	
VEF-1	Service Bays (garage area)	8 of 9	
IFH	Service Bays (garage area)	8 of 9	
EF-2	Wash Bay	6 of 9	
EF-3	Electrical Room	7 of 9	
CUH	Vestibule	8 of 9	

Centrix

Centrix Energy
790 Leis Dr
Sun Prairie, WI 53590
(817) 506 8303

No.	Description	D

ANCHOR BAY SCHOOL DISTRICT

DDC CONTROLS UPGRADES

TRANSPORTATION BUILDING

REQUEST FOR PROPOSAL

EQUIPMENT SCHEDULE FOR DDC UPGRADE

REQUEST FOR PROPOSAL
Project Number:
Date: 4/06/2

M002

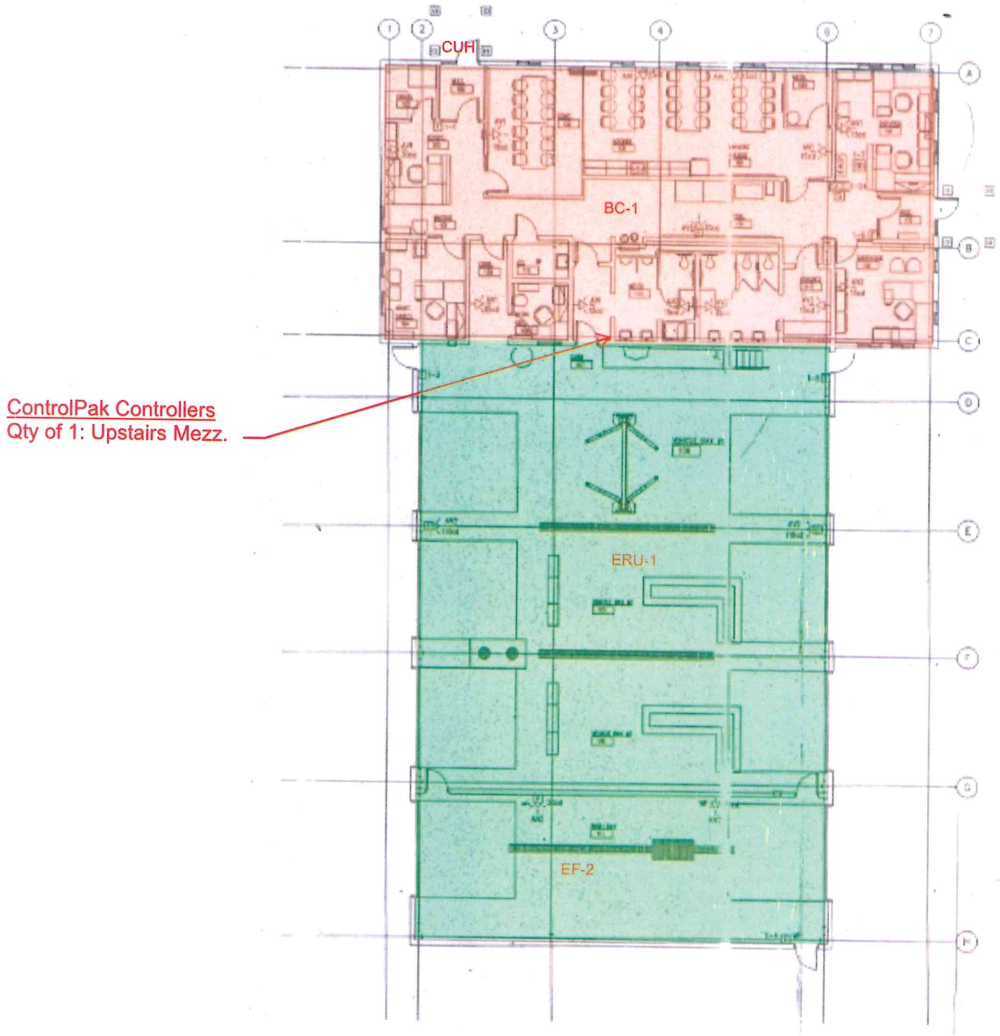

FLOORPLAN FOR DDC UPGRADE

Centrix

Centrix Energy
792 Lies Dr
Sun Prairie, WI 53590
(817) 506-8303

No.	Description	D

ANCHOR BAY SCHOOL DISTRICT

DDC CONTROLS UPGRADES

TRANSPORTATION BUILDING

REQUEST FOR PROPOSAL

FLOORPLAN FOR DDC UPGRADE

REQUEST FOR PROPOSAL
Project Number:
Date: 4/06/2

M003

TEMPERATURE CONTROLS
FOR
ANCHOR BAY SCHOOL DISTRICT
TRANSPORTATION CENTER

ARCHITECTS, PLANNERS, INTERIORS: French Associates

CONSTRUCTION MANAGEMENT: Barton Malow

MECHANICAL CONTRACTOR: Macomb Mechanical Inc.

TEMPERATURE CONTROLS CONTRACTOR: Controlled Temperature, Inc.

SYSTEM ARCHITECTURE

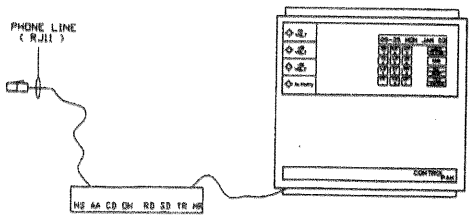

SOLUTIONS V.3 96
LAN ADDRESS 01 LOCATED
IN THE MEZZANINE

DRAWING	DESCRIPTION
01	TITLE PAGE with DRAWING INDEX
02	POINT TERMINATIONS
03A	BOILERS CONTROL WIRING
03B	BOILERS CONTROL LOGIC
04A	BLOWER COIL UNIT 1 W/REHEAT CONTROL WIRING
04B	BLOWER COIL UNIT 1 CONTROL LOGIC
04A	BLOWER COIL UNIT 1 REHEAT CONTROL LOGIC
05A	BLOWER COIL UNIT 2 CONTROL WIRING
05B	BLOWER COIL UNIT 2 CONTROL LOGIC
06A	ENERGY RECOVERY UNIT CONTROL WIRING
06B	ENERGY RECOVERY UNIT CONTROL LOGIC
07	ELECTRIC ROOM VENTILATION CONTROL WIRING
08	CUH & INFRA-RED HEATER CONTROL WIRING
09	STANDARD TERMINATIONS
	VALVE SCHEDULE

ANK SCHEDULE

AI BOARD 0				
PIN	DESCRIPTION	EQUIPMENT	AREA SERVED	
AI 1	CHANGE OVER REGISTER			
AI 2	OUTDOOR AIR TEMPERATURE			
AI 3	RAT	HRV SYSTEM	BUILDING	
AI 4	EAT	HRV SYSTEM	BUILDING	
AI 5	MA TEMP	RC-1	OFFICES	
AI 6	RA TEMP	RC-1	OFFICES	
AI 7	SPACE TEMP	RC-2	DISPATCH	
AI 8	SPACE TEMP	RC-3	DRIVERS LOUNGE	
AI 9	SPACE TEMP	RC-4	CORRIDOR	
AI 10	SPACE TEMP	RC-5	RECEPTION	
AI 11	SPACE TEMP	RC-6	MAINTENANCE DIRECTOR	
AI 12	SPACE TEMP	RC-7	MECH OFFICE	
AI 13	SPACE TEMP	RC-8	MECH/WORKING ROOM	
AI 14	SPACE TEMP	RC-9	SUPERVISOR	
AI 15	RA TEMP	EFUS	VEHICLE BAYS	
AI 16	SPACE TEMP	EFUS	VEHICLE BAYS	

AI BOARD 0				
PIN	DESCRIPTION	EQUIPMENT	AREA SERVED	
AI 17	SPACE TEMP	CONVECT	ELECT RM VENTILATION	
AI 18	RA TEMP	RC-2	BOILER ROOM	
AI 19	SPACE TEMP	RC-2	BOILER ROOM	

AO BOARD 0				
PIN	DESCRIPTION	EQUIPMENT	AREA SERVED	
AO 1	HRV DAMPERS	RC-1	OFFICES	
AO 2	HRV VALVE	RC-1	OFFICES	
AO 3	HRV VALVE	RC-1	DISPATCH	
AO 4	HRV VALVE	RC-2	DRIVERS LOUNGE	
AO 5	HRV VALVE	RC-3	CORRIDOR	
AO 6	HRV VALVE	RC-4	RECEPTION	
AO 7	HRV VALVE	RC-5	MAINTENANCE DIRECTOR	
AO 8	HRV VALVE	RC-6	MECH OFFICE	
AO 9	HRV VALVE	RC-7	MECH/WORKING ROOM	
AO 10	HRV VALVE	RC-8	SUPERVISOR	
AO 11	HRV VALVE	EFUS	VEHICLE BAYS	
AO 12	HRV VALVE	RC-2	BOILER ROOM	
AO 13	SPARE		ELECTRICAL RM	
AO 14	SPARE			

AO BOARD 0				
PIN	DESCRIPTION	EQUIPMENT	AREA SERVED	
DO 1	BOILER ENABLE	BOILER 1	BUILDING	
DO 2	BOILER ENABLE	BOILER 2	BUILDING	
DO 3	CP-1 ENABLE	CP-1	BUILDING	
DO 4	CP-2 ENABLE	CP-2	BUILDING	
DO 5	PUMP CP2 ON/OFF	PUMP CP-2	BUILDING	
DO 6	SFAN ON/OFF	RC-1	OFFICES	
DO 7	HRV ON/OFF	RC-1	OFFICES	
DO 8	EFL STILLS	RC-3	OFFICES	
DO 9	SPARE			
DO 10	SFAN ON/OFF	CF-1	MECH/WORKING ROOM	
DO 11	SFAN ON/OFF	CRU-1	VEHICLE BAYS	
DO 12	SFAN ON/OFF	CRU-2	VEHICLE BAYS	
DO 13	CF ON/OFF	CF-1	VEHICLE BAYS	
DO 14	EFAN ON/OFF	EFAN	ELECT RM VENTILATION	
DO 15	EFAN ON/OFF	CF-2	ELECT RM VENTILATION	
DO 16	VEF ON/OFF	VEF1	VEHICLE BAYS	

DO BOARD 0				
PIN	DESCRIPTION	EQUIPMENT	AREA SERVED	
DO 17	SFAN ON/OFF	RC-2	BOILER ROOM	
DO 18	CP ENABLE	RC-2	BOILER ROOM	

DI BOARD 0			
PIN	DESCRIPTION	EQUIPMENT	AREA SERVED
DI 1	BOILER STATUS	BOILER 1	BUILDING
DI 2	BOILER STATUS	BOILER 2	BUILDING
DI 3	CP-1 STATUS	CP-1	BUILDING
DI 4	CP-2 STATUS	CP-2	BUILDING
DI 5	PUMP CP2 STATUS	PUMP CP-2	BUILDING
DI 6	FAN STATUS	RC-1	OFFICES
DI 7	FAN STATUS	RC-1	OFFICES
DI 8	SFAN STATUS	CF1	MECH/WORKING
DI 9	SFAN STATUS	CRU-1	VEHICLE BAYS
DI 10	SFAN STATUS	CRU-2	VEHICLE BAYS
DI 11	FAN STATUS	CF-1 CRU-1	VEHICLE BAYS
DI 12	SFAN STATUS	RC-2	BOILER ROOM
DI 13	PUMP STATUS	RC-2	BOILER ROOM
DI 14	FILTER STATUS	RC-2	BOILER ROOM

Anchor Bay School District
Transportation Center

INPUT/OUTPUT TERMINATIONS

02

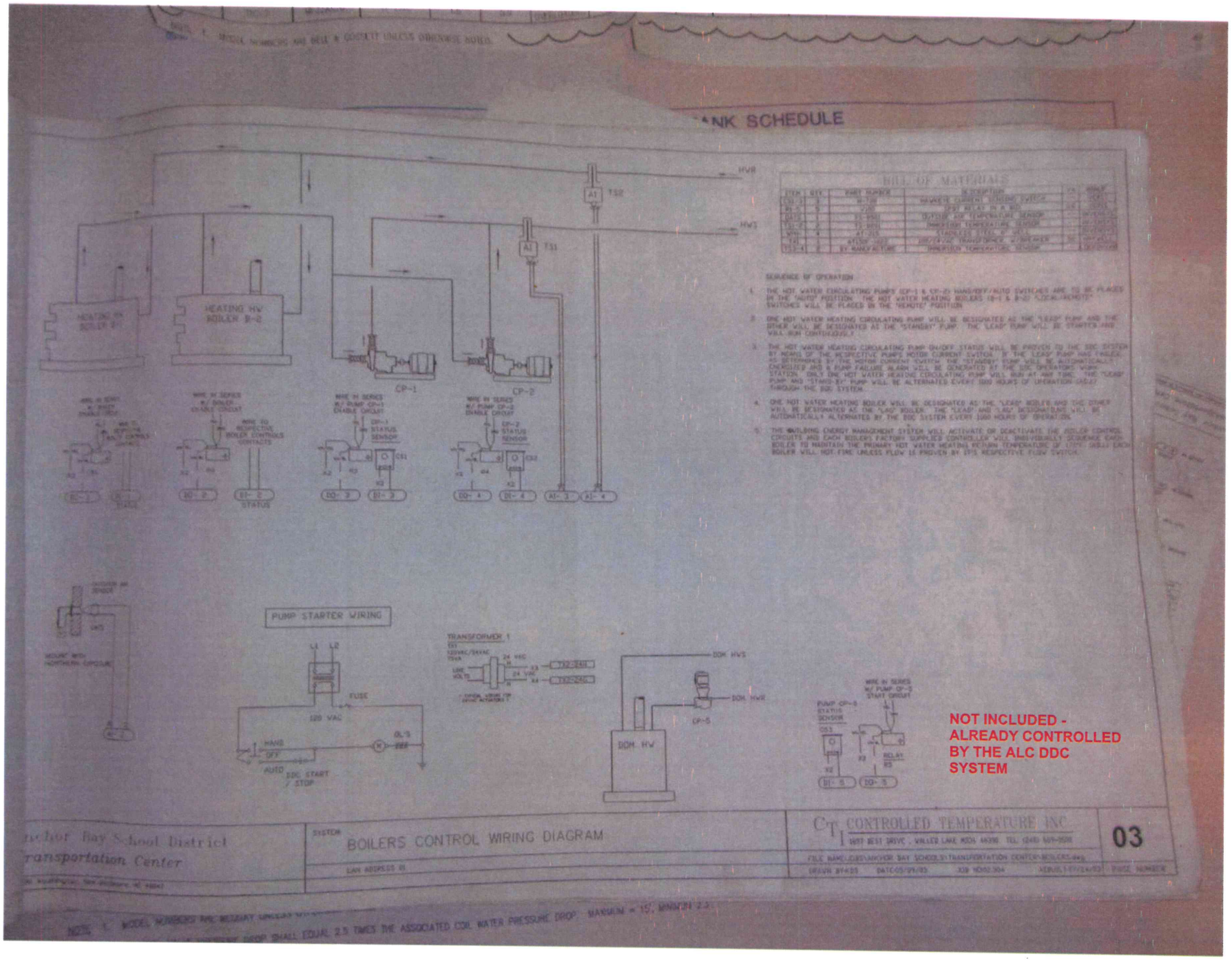
ANK SCHEDULE
HVR
HVS
TS2
TS1
HEATING HV BOILER B-2
CP-1
CP-2
PUMP STARTER WIRING
L1
L2
FUSE
120 VAC
HAND
OFF
AUTO
DDC START / STOP
TRANSFORMER 1
DOM HVS
DOM HVR
CP-5
DOM HV
PUMP CP-5 STATUS SENSOR
RELAY #5
NOT INCLUDED - ALREADY CONTROLLED BY THE ALC DDC SYSTEM
Anchor Bay School District
Transportation Center
BOILERS CONTROL WIRING DIAGRAM
CONTROLLED TEMPERATURE INC
03

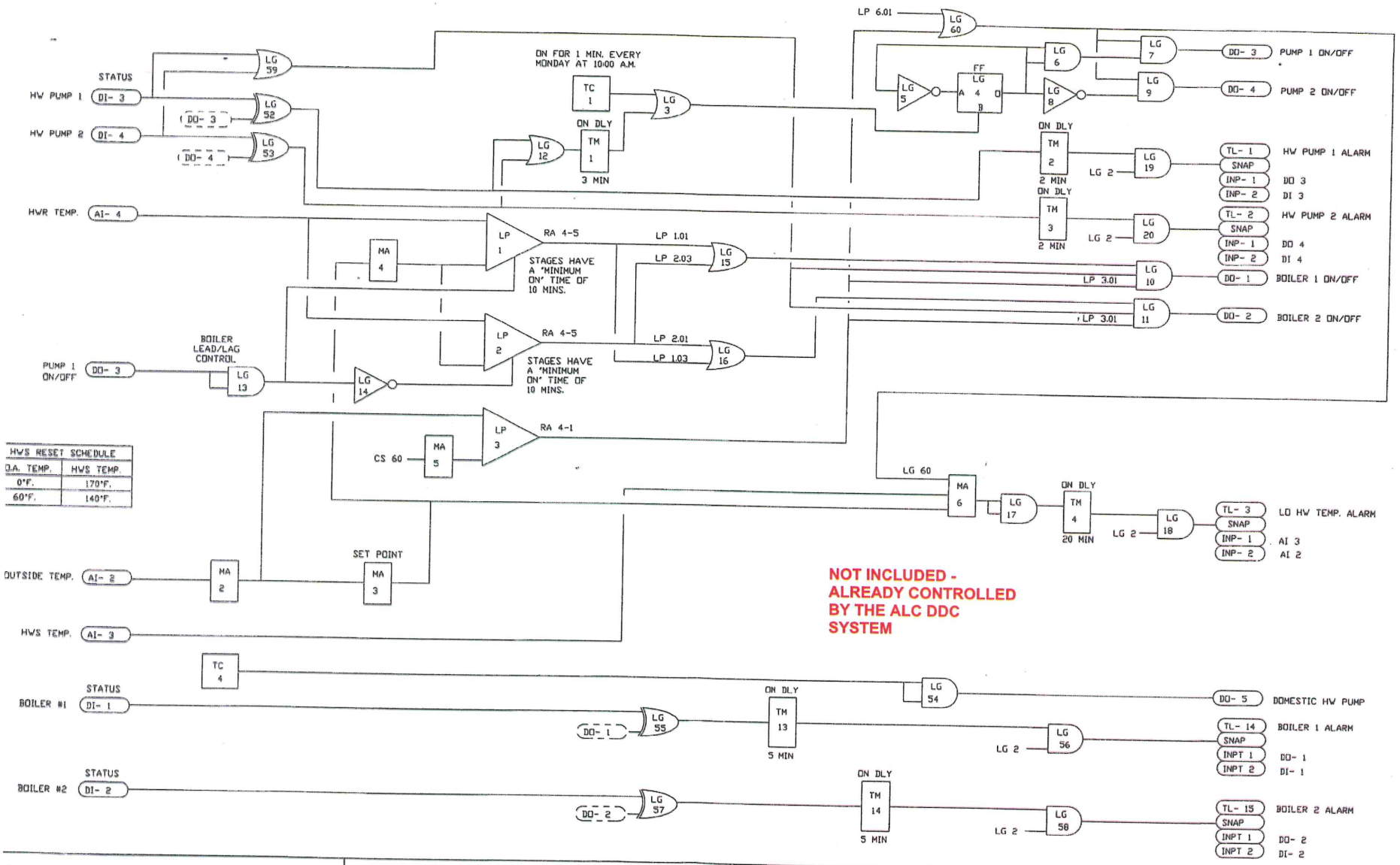

hor Bay School District
nsportation Center
ashington, New Baltimore, MI 48047

SYSTEM:
BOILERS CONTROL LOGIC DIAGRAM

LAN ADDRESS 01

CTI CONTROLLED TEMPERATURE INC.
1897 BEST DRIVE , WALLED LAKE MICH. 48390 TEL. (248) 669-0500

FILE NAME:JOBS\ANCHOR BAY SCHOOLS\TRANSPORTATION CENTER\BOILERS LOGIC.dwg

DRAWN BY:KDS DATE:03/27/03 JOB NO:02.304 ASBUILT:07/24/03

03B
PAGE NUMBER

4
NUMBER

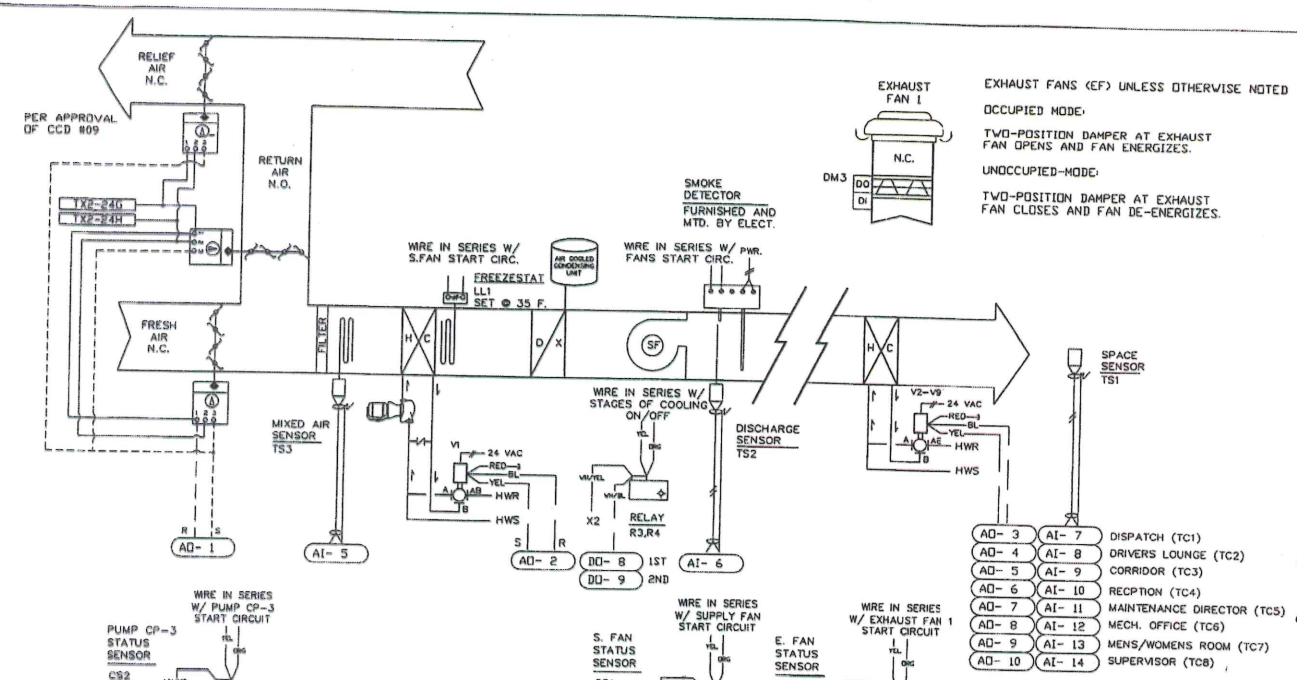

EXHAUST FANS (EF) UNLESS OTHERWISE NOTED

OCCUPIED MODE:

TWO-POSITION DAMPER AT EXHAUST FAN OPENS AND FAN ENERGIZES.

UNOCCUPIED-MODE:

TWO-POSITION DAMPER AT EXHAUST FAN CLOSES AND FAN DE-ENERGIZES.

BILL OF MATERIALS

ITEM	QTY.	PART NUMBER	DESCRIPTION	VA	MANUF.
CS1,2	2	H-708	HAWKEYE CURRENT SENSING SWITCH	--	VERIS
DM1-2	2	AF24-SR	PROP. DIRECT COUPLED DAMPER ACTUATOR	14.7	BELIMO
DM3	1	AF24-S	2-POS. DIRECT COUPLED DAMPER ACTUATOR	14.7	BELIMO
LL1	1	TC-5241	LOW TEMPERATURE THERMOSTAT M/R	--	INVENSYS
R1-R4	4	V100	SPDT RELAY IN A BOX	0.8	VERIS
SMK	1		PROVIDED BY OTHERS		
TS1	8	TS8101	SPACE TEMPERATURE SENSOR	--	INVENSYS
TS2	1	TS-8201	DUCT TEMPERATURE SENSOR	--	INVENSYS
TX1	1	AT150F1022	120/24VAC TRANSFORMER, W/BREAKER	50	JCI
V1	1	VS7313-201-4-04	24VAC,0-10VDC,PROP,3-WAY MIXING VALVE	18	INVENSYS
V 2-9	8	VS7313-201-4-02	24VAC,0-10VDC,PROP,3-WAY MIXING VALVE	18	INVENSYS

SEQUENCE OF OPERATION

1. WITH THE SUPPLY FAN HAND/OFF/AUTO SWITCH IN THE 'AUTO' POSITION, THE BLOWER COIL UNIT WILL BE AUTOMATICALLY STARTED AND STOPPED BASED ON THE OPTIMUM START PROGRAM AND THE OCCUPANCY SCHEDULE AS PROGRAMMED THROUGH THE DDC SYSTEM.
2. WITH THE EXHAUST FANS MOTOR STARTER HAND/OFF/AUTO SWITCH IN THE 'AUTO' POSITION, THE TOILET EXHAUST FAN WILL BE SOFTWARE INTERLOCKED WITH THE BCU SUPPLY FAN AND WILL START WHEN THE SUPPLY FAN IS STARTED DURING OCCUPIED HOURS. WHEN THE EXHAUST FAN IS STARTED, ITS ISOLATION DAMPER WILL SIMULTANEOUSLY OPEN. WHEN THE EXHAUST FAN IS STOPPED, ITS ASSOCIATED ISOLATION DAMPER WILL CLOSE. THE TOILET EXHAUST FAN WILL BE DE-ENERGIZED DURING UNOCCUPIED MODE.
3. DURING THE UNOCCUPIED MODE, BC-1 WILL BE CYCLED 'ON' AND 'OFF' BY THE NIGHT CYCLE PROGRAM TO MAINTAIN SPACE TEMPERATURE ABOVE 58°F. (ADJ.) BASED ON THE LOWEST READING FROM THE ZONE TEMPERATURE SENSORS. WHEN THE SUPPLY FAN IS STARTED PRIOR TO THE OCCUPANCY HOUR BY THE OPTIMUM START PROGRAM OR DURING THE NIGHT CYCLE, THE OUTSIDE AIR DAMPER AND RELIEF AIR DAMPER WILL REMAIN CLOSED AND THE RETURN AIR DAMPER WILL BE FULLY OPEN.
4. WHEN THE SUPPLY FAN IS STARTED IN THE OCCUPIED MODE, THE OUTSIDE AIR DAMPER'S WILL OPEN TO A MINIMUM OUTSIDE AIR POSITION (REFER TO THE MECHANICAL SCHEDULE FOR MINIMUM OUTSIDE AIR QUANTITY).
5. THE BLOWER COIL UNIT SUPPLY FAN ON/OFF STATUS WILL BE PROVEN TO THE DDC SYSTEM BY MEANS OF THE SUPPLY FAN MOTOR CURRENT SWITCH. IF THE BLOWER COIL UNIT HAS FAILED AS SENSED BY THE SUPPLY FAN MOTOR CURRENT SWITCH, THEN AN ALARM WILL BE SENT TO THE DDC SYSTEM INDICATING A BLOWER COIL UNIT FAILURE.
6. THE DISCHARGE AIR TEMPERATURE SENSOR THROUGH DDC WILL MODULATE THE MIXED AIR DAMPERS AND RELIEF AIR DAMPER BETWEEN MINIMUM POSITION AND FULL OPEN TO MAINTAIN A DISCHARGE AIR SETPOINT. WHEN THE MIXED AIR DAMPERS ARE AT THEIR MINIMUM SETPOINT AND THE DISCHARGE AIR TEMPERATURE IS 2°F. BELOW SETPOINT (ADJ.) THE HEATING VALVE WILL BE MODULATED TO MAINTAIN THE DISCHARGE AIR SETPOINT. WHEN OUTSIDE AIR TEMPERATURE RISES ABOVE RETURN OR SPACE TEMPERATURE, THE MIXED AIR DAMPERS WILL CLOSE TO MINIMUM POSITION. WHEN DISCHARGE AIR TEMPERATURE IS 2°F. ABOVE DISCHARGE SETPOINT THE DX COOLING WILL BE CYCLED TO MAINTAIN DISCHARGE SETPOINT. THE DISCHARGE AIR SETPOINT WILL BE 55°F. (ADJ.) WHEN THE OUTSIDE AIR TEMPERATURE IS 25°F. OR ABOVE, AND THE DISCHARGE AIR SETPOINT WILL BE 60°F. WHEN THE OUTSIDE AIR TEMPERATURE IS 25°F. OR BELOW (ADJ.)
7. THE ZONE SPACE TEMPERATURE SENSORS, THROUGH DDC, WILL MODULATE THEIR RESPECTIVE TEMPERING COIL VALVES TO MAINTAIN SPACE TEMPERATURE SETPOINT.
8. THE HOT WATER HEATING (HWH) COIL CIRCULATING PUMP MOTOR STARTER HAND/OFF/AUTO SWITCH WILL BE PLACED IN THE "AUTO" POSITION. WHEN THE OUTSIDE AIR TEMPERATURE IS 55°F. OR BELOW (ADJ.), THE HEATING COIL CIRCULATING PUMP WILL BE ENERGIZED AND WILL RUN CONTINUOUSLY BY THE DDC SYSTEM. WHEN THE OUTSIDE AIR TEMPERATURE IS 60°F. OR ABOVE (ADJ.) THE HEATING COIL CIRCULATING PUMP WILL BE OFF.
9. PROOF OF FLOW STATUS FOR HWH COIL CIRCULATING PUMP WILL BE PROVEN TO THE DDC SYSTEM BY MEANS OF ITS PUMP MOTOR CURRENT SWITCH. IF THE HWH COIL CIRCULATING PUMP HAS FAILED AS SENSED TO THE DDC SYSTEM BY THE MOTOR CURRENT SWITCH, THEN AN ALARM WILL BE INDICATED TO THE DDC SYSTEM.
10. IF THE SETPOINT OF A FREEZESTAT IS REACHED, THE SUPPLY FAN WILL BE DE-ENERGIZED, DAMPERS GO TO NORMAL POSITION AND HEATING HOT WATER VALVE MODULATES OPEN TO MAINTAIN AHU PLENUM TEMPERATURE OF 50°F.

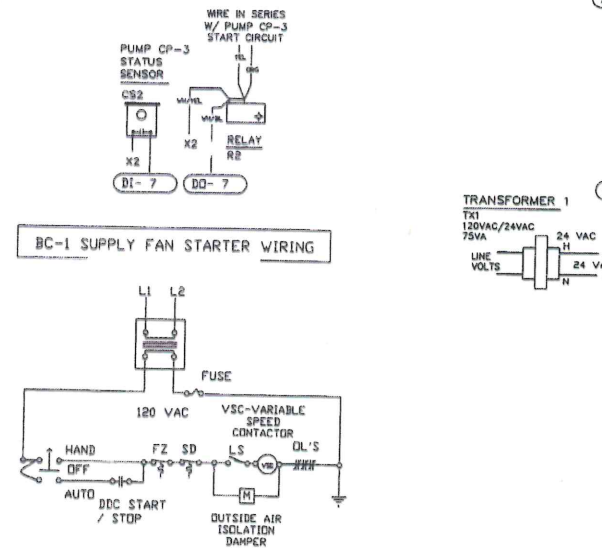

BC-1 SUPPLY FAN STARTER WIRING

INCLUDE IN BASE BID

Anchor Bay School District
Transportation Center
51890 Washington, New Baltimore, MI 48047

SYSTEM:
BLOWER COIL UNIT CONTROL WIRING DIAGRAM (BC-1)
LAN ADDRESS 01
SERVES THE OFFICES

CTI CONTROLLED TEMPERATURE INC.
1897 BEST DRIVE, WALLED LAKE MICH. 48390 TEL. (248) 669-0500
FILE NAME:JOBS\ANCHOR BAY SCHOOLS\TRANSPORTATION CENTER\BC-1.dwg
DRAWN BY:KDS DATE:07/02/03 JOB NO:02.304 ASBUILT:07/24/03

04
PAGE NUMBER

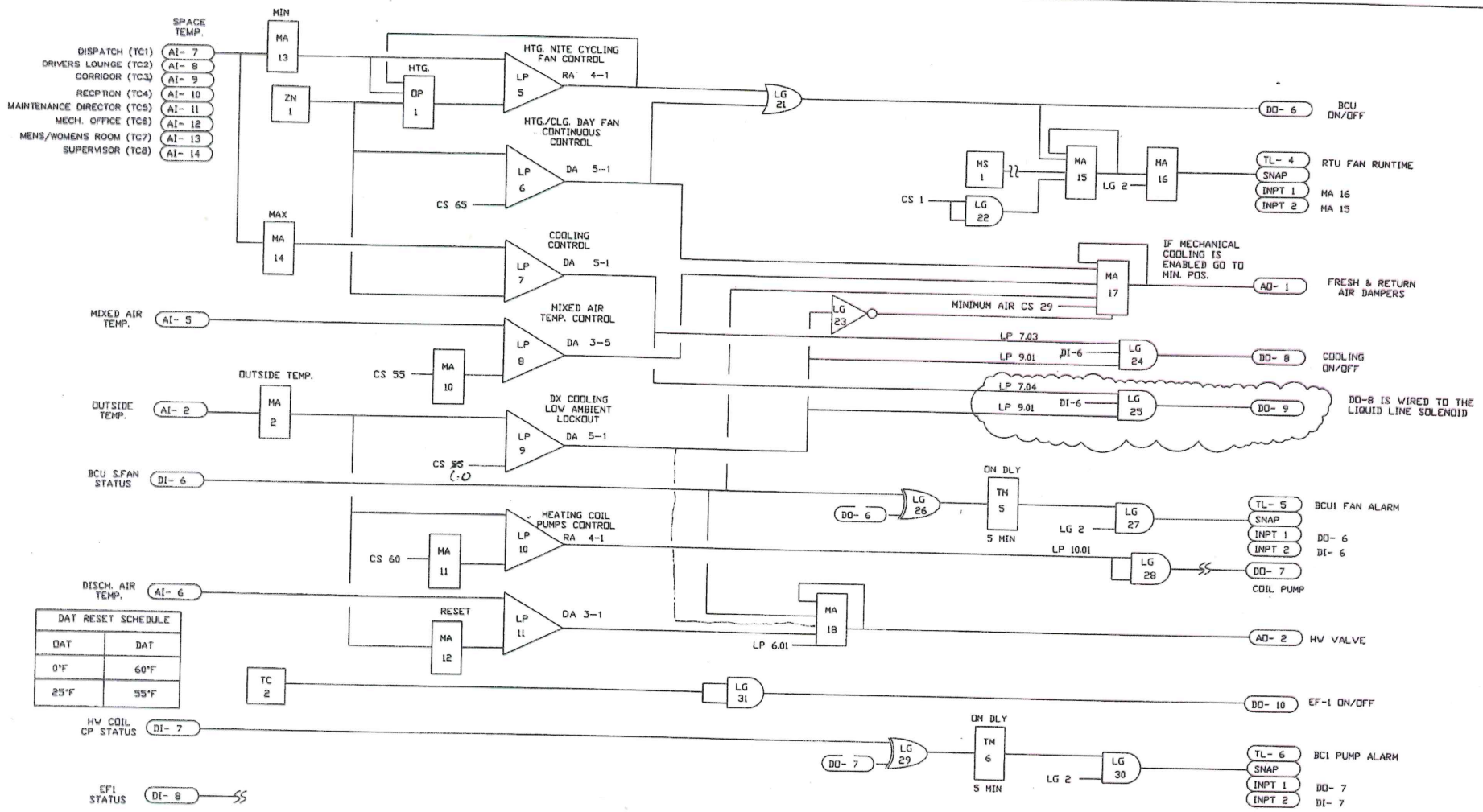

INCLUDE IN BASE BID

Anchor Bay School District
Transportation Center
51890 Washington, New Baltimore, MI 48047

SYSTEM:
BLOWER COIL UNIT CONTROL WIRING DIAGRAM
LAN ADDRESS 01

CTI CONTROLLED TEMPERATURE INC.
1897 BEST DRIVE , WALLED LAKE MICH. 48390 TEL. (248) 669-0500
FILE NAME:JOBS\ANCHOR BAY SCHOOLS\TRANSPORTATION CENTER\BC-1 LOGIC.dwg
DRAWN BY:KDS DATE:03/27/03 JOB NO:02.304 ASBUILT:07/24/03

04B
PAGE NUMBER

Temp Coil

	TC NUMBER	ANALOG INPUT	SETPOINT MATH	LOOP	CONTROL MATH	ANALOG OUTPUT
DISPATCH (TC1)	TC1	7	29	19	30	3
DRIVERS LOUNGE (TC2)	TC2	8	31	20	32	4
CORRIDOR (TC3)	TC3	9	33	21	34	5
RECPTION (TC4)	TC4	10	35	22	36	6
MAINTENANCE DIRECTOR (TC5)	TC5	11	37	23	38	7
MECH. OFFICE (TC6)	TC6	12	39	24	40	8
MENS/WOMENS ROOM (TC7)	TC7	13	41	25	42	9
SUPERVISOR (TC8)	TC8	14	43	26	44	10

INCLUDE IN BASE BID

Anchor Bay School District
Transportation Center
51890 Washington, New Baltimore, MI 48047

SYSTEM:
BC--1 REHEAT LOGIC DIAGRAM
LAN ADDRESS 01

CTI CONTROLLED TEMPERATURE INC.
1897 BEST DRIVE , WALLED LAKE MICH. 48390 TEL. (248) 669-0500

FILE NAME:JOBS\ANCHOR BAY SCHOOLS\TRANSPORTATION CENTER\BC-1 RH LOGIC.dwg
DRAWN BY:KDS DATE:07/07/03 JOB NO:02.304 ASBUILT:07/24/03

04C
PAGE NUMBER

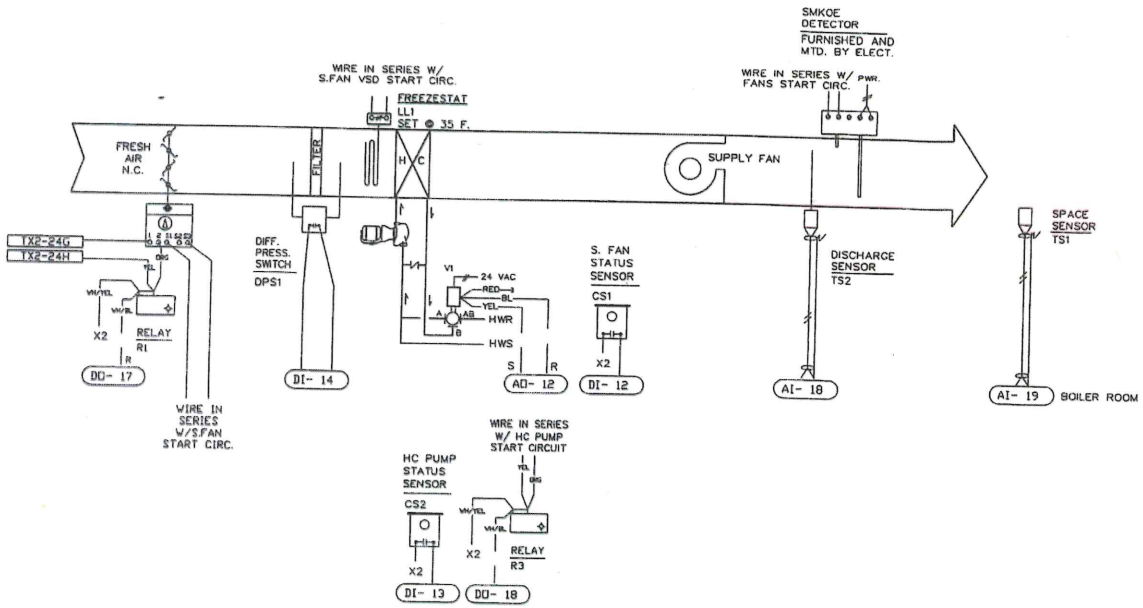

BILL OF MATERIALS

ITEM	QTY.	PART NUMBER	DESCRIPTION	VA	MANUF.
CS1,2	2	H-708	HAWKEYE CURRENT SENSING SWITCH	--	VERIS
DM1	1	AF24S	2-POS,DIRECT COUPLED DAMPER ACTUATOR	14.7	BELIMO
LL1	1	TC-5241	LOW TEMPERATURE THERMOSTAT M/R	--	INVENSYS
DPS1	1	PC301	0-1" STATIC PRESSURE SWITCH	--	INVENSYS
R1,2	2	V100	SPDT RELAY IN A BOX W/OVER-RIDE SW	0.8	VERIS
SMK	1		PROVIDED BY OTHERS		
TS1	1	TS8101	SPACE TEMPERATURE SENSOR	--	INVENSYS
TS2	1	TS-8201	DUCT TEMPERATURE SENSOR	--	INVENSYS
TX1	1	AT150F-1022	120/24VAC TRANSFORMER, W/BREAKER	50	H'WELL
V1	1	VS7313-201-4-02	24VAC,0-10VDC,PROP,3-WAY MIXING VALVE	18	INVENSYS

SEQUENCE OF OPERATION

1. WITH THE SUPPLY HAND/OFF/AUTO SWITCH IN THE 'AUTO' POSITION, THE BLOWER COIL UNIT WILL BE AUTOMATICALLY STARTED AND STOPPED THROUGH THE DDC SYSTEM. THE SUPPLY FAN WILL BE PROGRAMMED TO RUN CONTINUOUSLY.
2. WHEN THE CONTROL CIRCUIT OF THE BLOWER COIL UNIT SUPPLY FAN IS ENERGIZED TO START THE SUPPLY FAN, THE OUTSIDE AIR DAMPER WILL OPEN FIRST. AFTER THE DAMPER IS FULLY OPEN, THE DAMPER'S LIMIT SWITCH WILL COMPLETE THE CONTROL CIRCUIT TO START THE SUPPLY FAN.
3. THE BLOWER COIL UNIT SUPPLY FAN ON/OFF STATUS WILL BE PROVEN TO THE DDC SYSTEM BY MEANS OF THE SUPPLY FAN MOTOR CURRENT SWITCH. IF THE BLOWER COIL UNIT HAS FAILED AS SENSED BY THE SUPPLY FAN MOTOR CURRENT SWITCH, THEN AN ALARM WILL BE SENT TO THE DDC SYSTEM INDICATING A BLOWER COIL UNIT FAILURE.
4. THE DISCHARGE AIR SENSOR TEMPERATURE SENSOR THROUGH DDC WILL MODULATE THE HEATING COIL CONTROL VALVE TO MAINTAIN THE DISCHARGE AIR TEMPERATURE SETPOINT. THE DISCHARGE AIR TEMPERATURE SETPOINT WILL BE RESET BETWEEN 50°F. AND 95°F. TO MAINTAIN THE SPACE TEMPERATURE BETWEEN A LOW LIMIT OF 60°F. AND A HIGH LIMIT OF 85°F. (ADJ.)
5. THE HOT WATER HEATING (HWH) COIL CIRCULATING PUMP MOTOR STARTER HAND/OFF/AUTO SWITCH WILL BE PLACED IN THE "AUTO" POSITION.
6. WHEN THE OUTSIDE AIR TEMPERATURE IS 55°F. OR BELOW (ADJ.), THE HEATING COIL CIRCULATING PUMP WILL BE ENERGIZED AND WILL RUN CONTINUOUSLY BY THE DDC SYSTEM. WHEN THE OUTSIDE AIR TEMPERATURE IS 60°F. OR ABOVE (ADJ.) THE HEATING COIL CIRCULATING PUMP WILL BE OFF.
7. PROOF OF FLOW STATUS FOR HWH COIL CIRCULATING PUMP WILL BE PROVEN TO THE DDC SYSTEM BY MEANS OF ITS PUMP MOTOR CURRENT SWITCH. IF THE HWH COIL CIRCULATING PUMP HAS FAILED AS SENSED TO THE DDC SYSTEM BY THE MOTOR CURRENT SWITCH, THEN AN ALARM WILL BE INDICATED TO THE DDC SYSTEM.
8. IF SMOKE IS DETECTED IN THE AIR STREAM BY A SMOKE DETECTOR, OF THE SETPOINT OF A FREEZESTAT IS REACHED, THE SUPPLY FAN WILL BE DE-ENERGIZED.
9. THE FILTER DIFFERENTIAL PRESSURE SWITCH WILL ISSUE A DIRTY FILTER ALARM TO THE DDC IF ITS SETPOINT IS REACHED.
10. IF THE BLOWER COIL UNIT SUPPLY FAN IS DE-ENERGIZED, THE OUTSIDE AIR DAMPER WILL FULLY CLOSE. THE HEATING COIL CONTROL VALVE WILL BE MODULATED BY THE DISCHARGE AIR TEMPERATURE SENSOR TO MAINTAIN A A LOW LIMIT PLENUM TEMPERATURE OF 50°F.

SUPPLY FAN STARTER WIRING

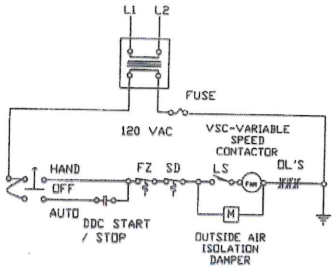

TRANSFORMER 1

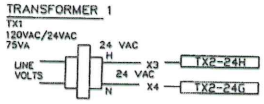

INCLUDE IN BASE BID

Anchor Bay School District
Transportation Center
51890 Washington, New Baltimore, MI 48047

SYSTEM:
BLOWER COIL UNIT 2 CONTROL WIRING DIAGRAM
LAN ADDRESS 01
SERVES THE BOILER ROOM

CTI CONTROLLED TEMPERATURE INC.
1897 BEST DRIVE , WALLED LAKE MICH. 48390 TEL. (248) 669-0500
FILE NAME:JOBS\ANCHOR BAY SCHOOLS\TRANSPORTATION CENTER\BC-2.dwg
DRAWN BY:KDS DATE:07/02/03 JOB NO:02.304 ASBUILT:07/24/03

05A
PAGE NUMBER

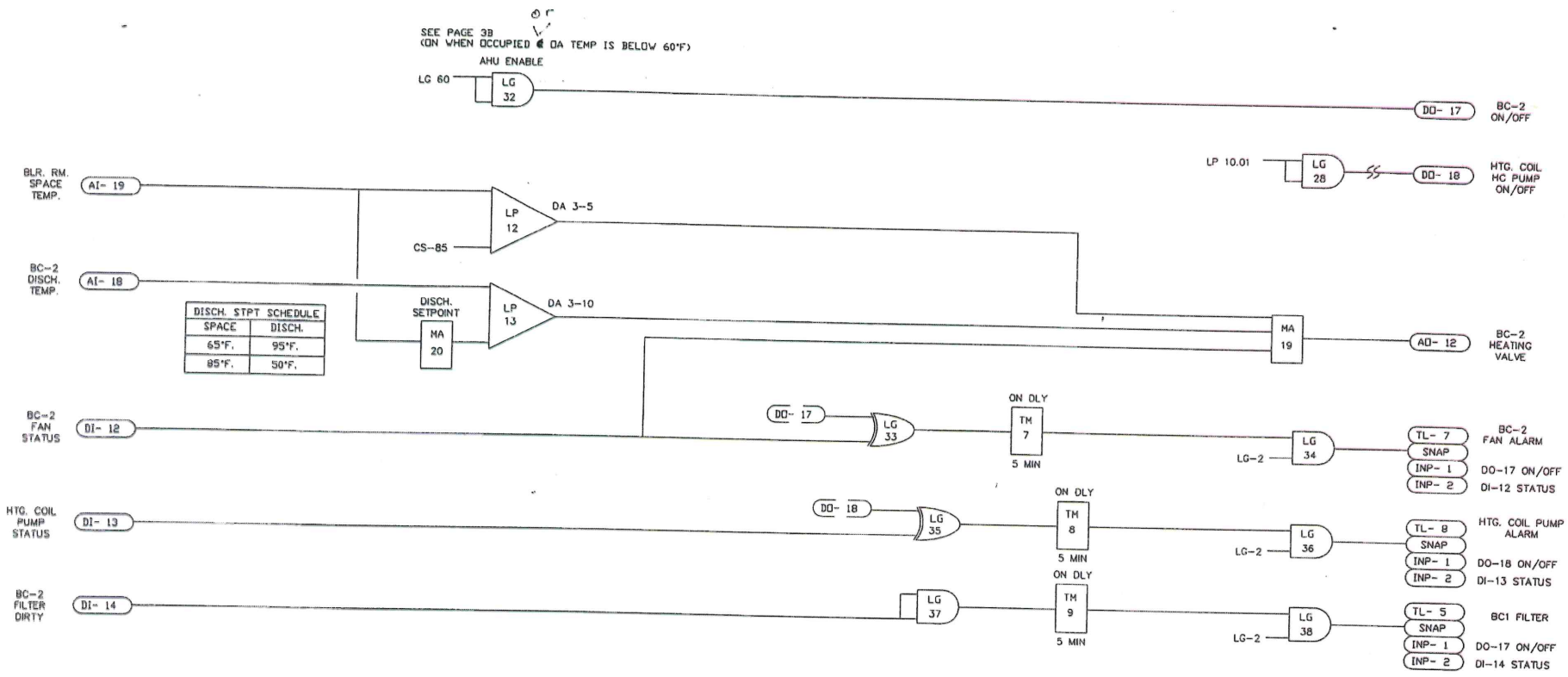

DISCH. STPT SCHEDULE	
SPACE	DISCH.
65°F.	95°F.
85°F.	50°F.

INCLUDE IN BASE BID

Anchor Bay School District
Transportation Center
51890 Washington, New Baltimore, MI 48047

SYSTEM:
BLOWER COIL UNIT 2 CONTROL LOGIC DIAGRAM
LAN ADDRESS 01
SERVES THE BOILER ROOM

CTI CONTROLLED TEMPERATURE INC.
1897 BEST DRIVE, WALLED LAKE MICH. 48390 TEL. (248) 669-0500
FILE NAME:JOBS\ANCHOR BAY SCHOOLS\TRANSPORTATION CENTER\BC-2 LOGIC.dwg
DRAWN BY:KDS DATE:07/07/03 JOB NO:02.304 ASBUILT:07/24/03

05B
PAGE NUMBER

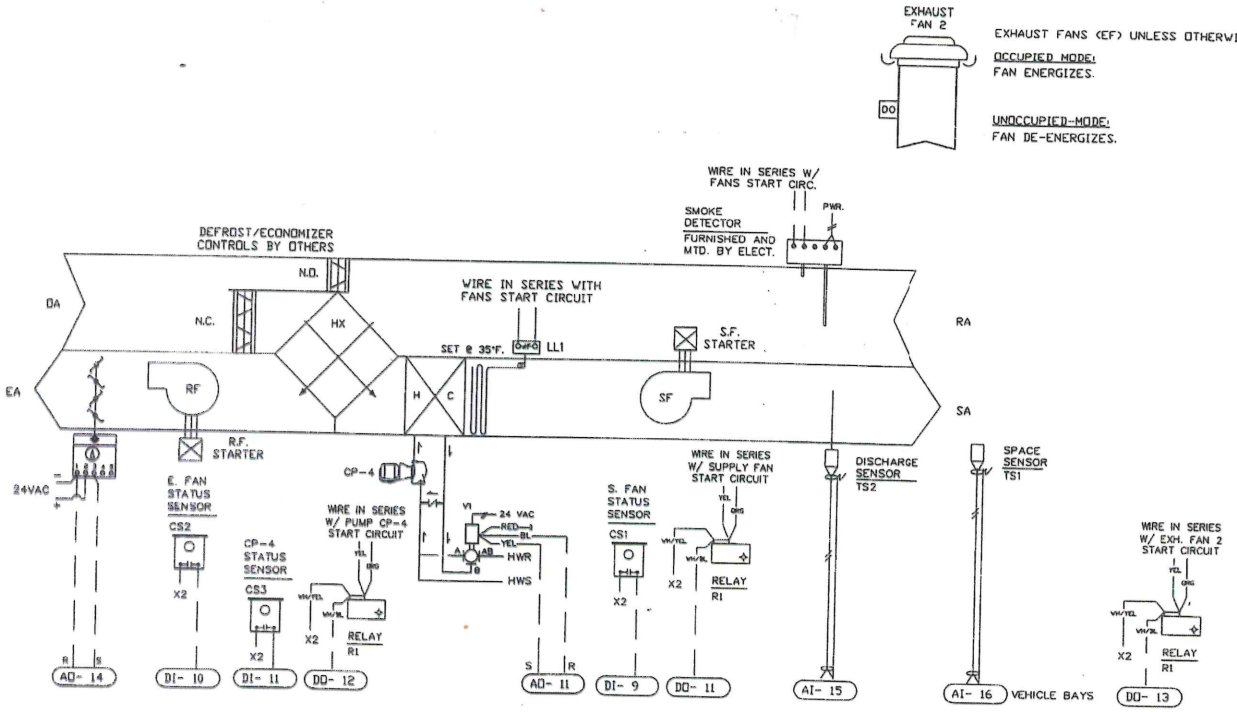

BILL OF MATERIALS

ITEM	QTY.	PART NUMBER	DESCRIPTION	VA	MANUF.
CS1-3	3	H-708	HAWKEYE CURRENT SENSING SWITCH	--	VERIS
LL1	1	TC-5241	LOW TEMPERATURE THERMOSTAT M/R	--	INVENSYS
RI-2	2	V100	" SPDT RELAY IN A BOX	0.8	VERIS
SMK	1		PROVIDED BY OTHERS		
TS 1	1	TS-8101	SPACE TEMPERATURE SENSOR	--	INVENSYS
TS 2	1	TS-8201	DUCT TEMPERATURE SENSOR	--	INVENSYS
TX1	1	AT150F1022	120/24VAC TRANSFORMER, W/BREAKER	50	JCI
V1	1	VS7313-201-4-06	24VAC,0-10VDC,PROP,3-WAY MIXING VALVE	18	INVENSYS
DM1	1	AF24-SR	PROP, DIRECT COUPLED DAMPER ACTUATOR	14.7	BELIMO

SEQUENCE OF OPERATION

1. WHEN DISCONNECT SWITCH IS IN THE "ON" POSITION: THE UNIT IS ENERGIZED, THE EXHAUST FAN IS ENERGIZED AND THE EXHAUST GRAVITY DAMPER OPENS, THE OUTSIDE AIR FACE DAMPER OPENS, WHEN THE DAMPER OPENS THE SUPPLY FAN IS ENERGIZED. WHEN THE DISCONNECT SWITCH IS "OFF": SUPPLY AND EXHAUST FANS ARE DE-ENERGIZED, OUTSIDE AIR AND EXHAUST AIR DAMPERS CLOSE.

2. (HEAT EXCHANGER) OUTSIDE AIR FACE & BYPASS DAMPER SEQUENCE

   A PROPORTIONAL/INTEGRAL CONTROLLER WILL BE MOUNTED IN THE CONTROL PANEL. THE CONTROLLER WILL HAVE A DEFROST SENSOR MOUNTED IN THE EXHAUST AIR STREAM LEAVING THE HEAT EXCHANGER AND AN ECONOMIZER SENSOR MOUNTED IN THE OUTSIDE AIR STREAM ENTERING THE HEAT EXCHANGER.

3. WINTER DEFROST MODE (EXHAUST AIR TEMPERATURE LEAVING HX BELOW 33°F.)

   THE CONTROLLER WILL MODULATE THE FACE/BYPASS DAMPERS TO PREVENT THE EXHAUST AIR STREAM TEMPERATURE FROM DROPPING BELOW 33°F. THE BYPASS DAMPER MODULATES OPEN AND THE FACE DAMPER MODULATES CLOSED TO PREVENT FROSTING ON THE HEAT EXCHANGER.

4. WINTER ENERGY RECOVERY MODE (EXHAUST LEAVING AIR TEMPERATURE ABOVE 33°F. AND OUTSIDE AIR TEMPERATURE BELOW 70°F)

   FACE DAMPER FULL OPEN, BYPASS DAMPER FULL CLOSED. ALL OUTSIDE AIR PASSES THROUGH THE HEAT EXCHANGER.

5. ECONOMIZER MODE (OA TEMPERATURE ABOVE 70°F. AND BELOW 80°F.)

   FACE DAMPER FULL CLOSED, BYPASS DAMPER FULL OPEN. OUTSIDE AIR IS BYPASSED AROUND THE HEAT EXCHANGER.

6. SUMMER ENERGY RECOVERY MODE (OUTSIDE AIR TEMPERATURE ABOVE 80°F.)

   FACE DAMPER FULL OPEN, BYPASS DAMPER FULL CLOSED. ALL OUTSIDE AIR PASSES THROUGH THE HEAT EXCHANGER.

7. HEATING SEQUENCE OF OPERATION:

   THE DDC SYSTEM WILL MODULATE THE HEATING COIL CONTROL VALVE TO MAINTAIN A SPACE TEMPERATURE SETPOINT OF 72°F. (ADJUSTABLE) OCCUPIED MODE, AND A SPACE TEMPERATURE SETPOINT OF 88°F. (ADJUSTABLE) UNOCCUPIED MODE. AN OPTIMIZER PROGRAM WILL DETERMINE HOW LONG IT TAKES TO GET THE SPACE TEMPERATURE TO SETPOINT PRIOR TO OCCUPANCY.

8. SAFETY DEVICES:

   HEATING COIL LOW LIMIT THERMOSTAT WILL PREVENT THE FAN FROM OPERATING WHEN THE COIL DISCHARGE AIR FALLS BELOW ITS SETPOINT. ONCE TRIPPED, THIS DEVICE MUST BE MANUALLY RESET BEFORE THE FAN WILL RESUME OPERATION. DUCT SMOKE DETECTOR WILL PREVENT FAN OPERATION WHEN PARTICLES OF COMBUSTION ARE DETECTED IN THE AIRSTREAM. PROVIDE CURRENT SENSOR ON HEATING COIL PUMP FOR FREEZE PROTECTION TO SHUT DOWN AHU AND CLOSE OUTSIDE AIR DAMPER.

INCLUDE IN BASE BID

Anchor Bay School District
Transportation Center
51890 Washington, New Baltimore, MI 48047

SYSTEM:
ENERGY RECOVERY UNIT CONTROL WIRING DIAGRAM

LAN ADDRESS 01
SERVES THE VEHICLE BAYS

CTI CONTROLLED TEMPERATURE INC.
1897 BEST DRIVE , WALLED LAKE MICH. 48390 TEL. (248) 669-0500

FILE NAME:JOBS\ANCHOR BAY SCHOOLS\TRANSPORTATION CENTER\ERU1.dwg
DRAWN BY:KDS DATE:07/03/03 JOB NO:02.304 ASBUILT:07/24/03

06A
PAGE NUMBER

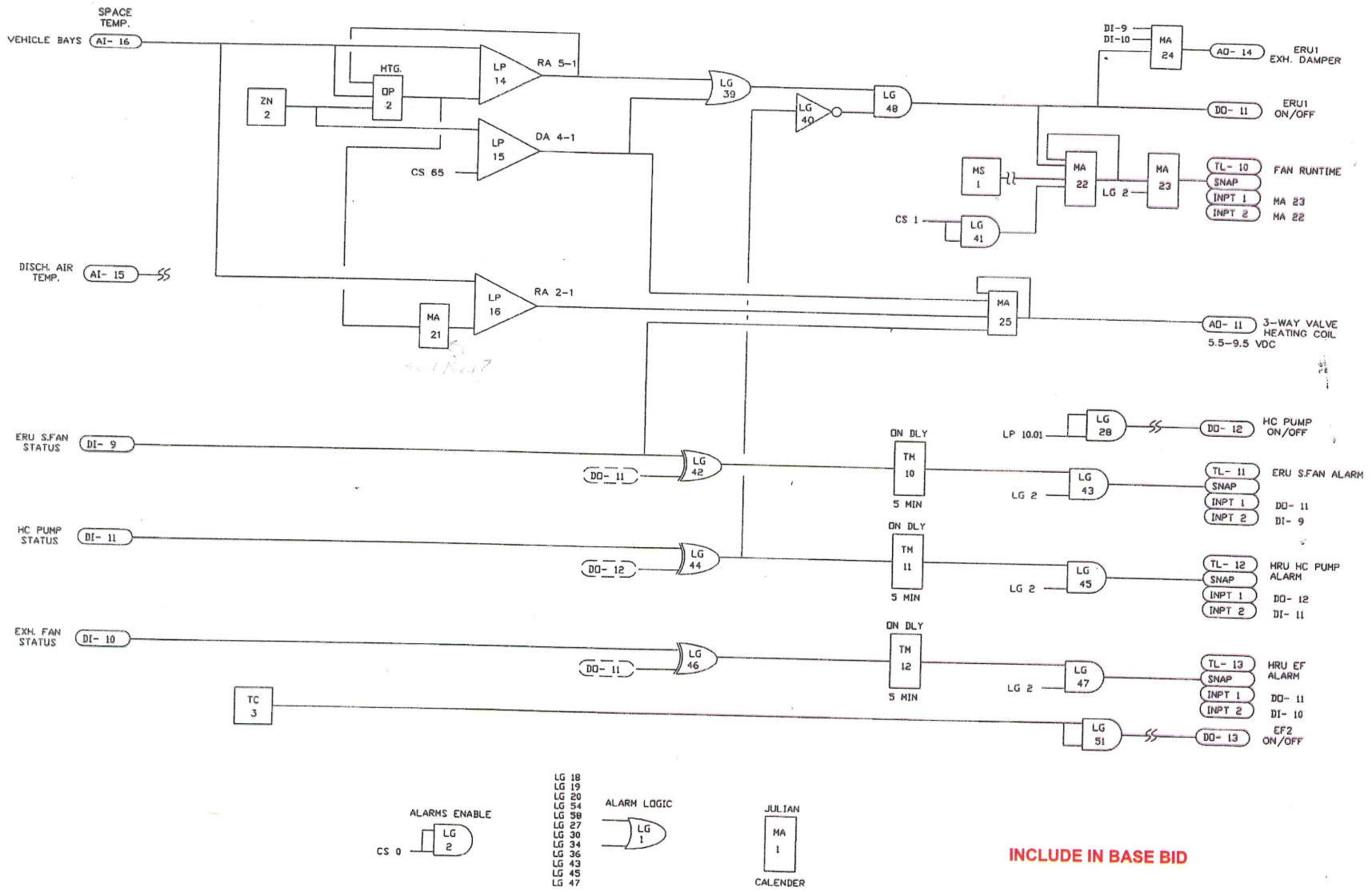

INCLUDE IN BASE BID

Anchor Bay School District
Transportation Center
51890 Washington, New Baltimore, MI 48047

SYSTEM:
ENERGY RECOVERY UNIT CONTROL LOGIC DIAGRAM
LAN ADDRESS 01

CTI CONTROLLED TEMPERATURE INC.
1897 BEST DRIVE , WALLED LAKE MICH. 48390 TEL. (248) 669-0500
FILE NAME:JOBS\ANCHOR BAY SCHOOLS\TRANSPORTATION CENTER\ERU1 LOGIC.dwg
DRAWN BY:KDS DATE:07/07/03 JOB NO:02.304 ASBUILT:07/24/03

06B
PAGE NUMBER

BILL OF MATERIALS

ITEM	QTY.	PART NUMBER	DESCRIPTION	VA	MANUF.
AQ	1	TC2974	AQUASTAT	--	INVENSYS
FC	1	R8239B1043	FANCENTER	--	HNYWELL
R1-3	3	V100	SPDT RELAY IN A BOX	0.8	VERIS
DM1-2	2	AF24S	2-POSITION DIRECT COUPLED ACTUATOR	14	BELIMO
TS1	1	TS-8101	SPACE TEMPERATURE SENSOR	--	INVENSYS
TX1	1	AT150F1022	120/24VAC TRANSFORMER, W/BREAKER	50	HNYWELL
V1	1	VA7313-201-4-02	24VAC,2-POS,3-WAY MIXING VALVE	18	INVENSYS

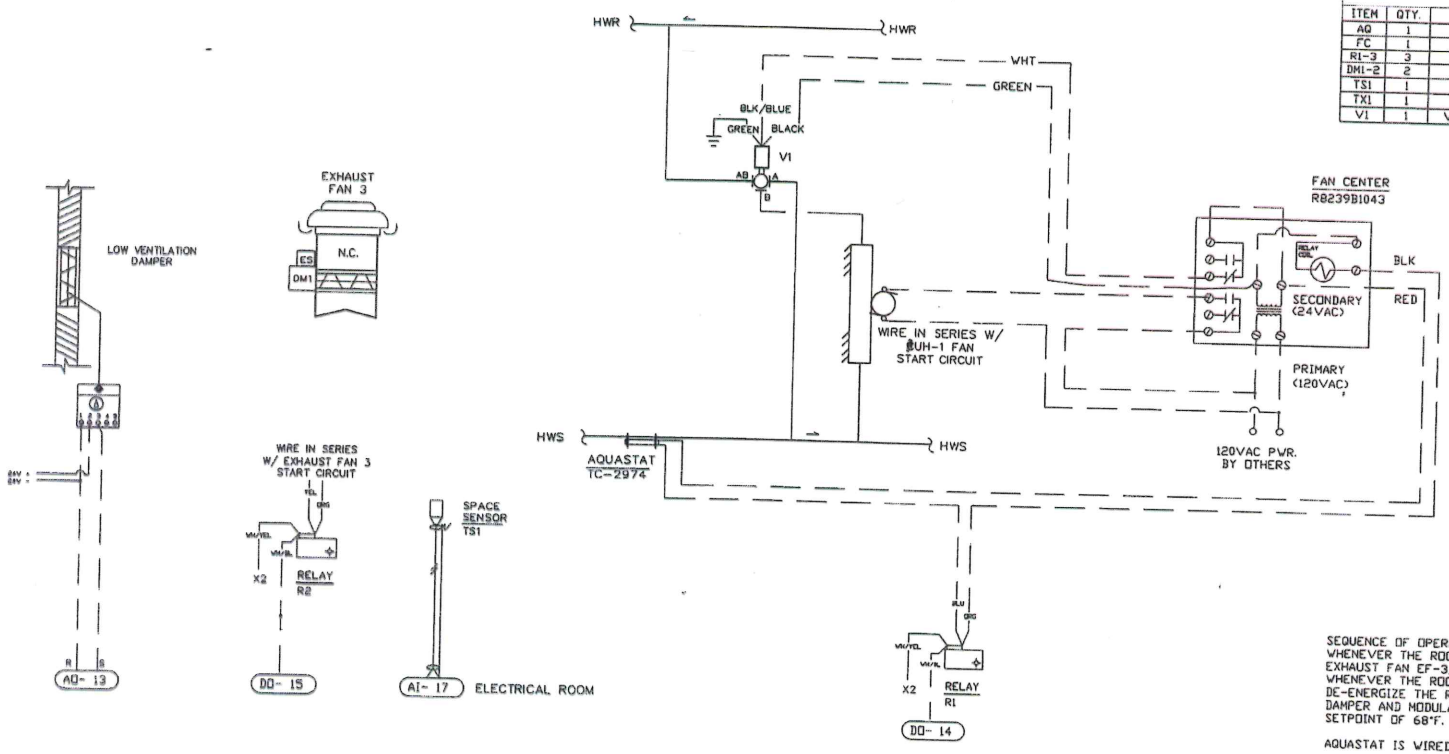

SEQUENCE OF OPERATION:
WHENEVER THE ROOM TEMPERATURE RISES ABOVE 80°F (ADJ.) THE T-SENSOR WILL START EXHAUST FAN EF-3, OPEN THE ROOF EXHAUST DAMPER AND THE LOW VENTILATOR DAMPER. WHENEVER THE ROOM TEMPERATURE DROPS BELOW 80°F. THE T-SENSOR WILL DE-ENERGIZE THE ROOM EXHAUST FAN CLOSE THE ROOF EXHAUST AND LOW VENTILATION DAMPER AND MODULATE THE HEATING CONTROL VALVE TO MAINTAIN SPACE TEMPERATURE SETPOINT OF 68°F.

AQUASTAT IS WIRED TO FAN TO PREVENT FAN OPERATION WHEN HEAT IS NOT AVAILABLE.

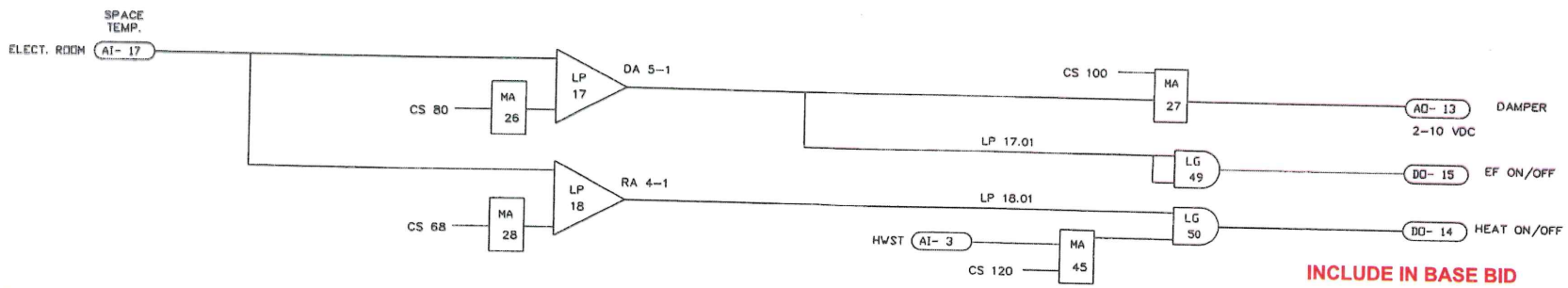

INCLUDE IN BASE BID

Anchor Bay School District
Transportation Center
51090 Washington, New Baltimore, MI 48047

SYSTEM:
ELECTRICAL ROOM VENTILATION CONTROL WIRING DIAGRAM
LAN ADDRESS 01

CTI CONTROLLED TEMPERATURE INC.
1897 BEST DRIVE, WALLED LAKE MICH. 48390 TEL. (248) 669-0500

FILE NAME:JOBS\ANCHOR BAY SCHOOLS\TRANSPORTATION CENTER\ELECT ROOM VENT.dwg
DRAWN BY:KDS DATE:05/19/03 JOB NO:02.304 ASBUILT:07/24/03

07
PAGE NUMBER

CUH WIRING DIAGRAM

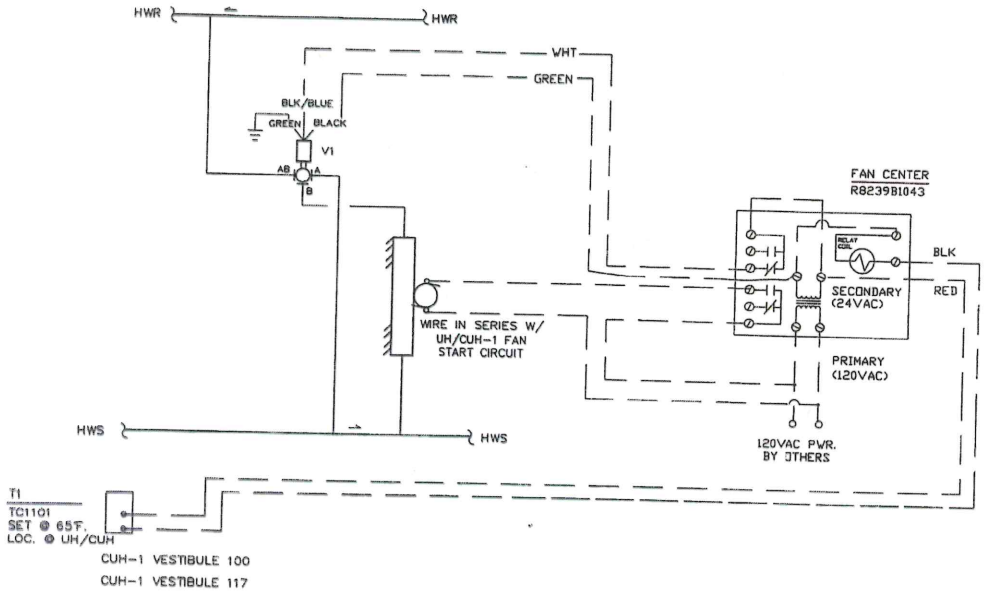

BILL OF MATERIALS

ITEM	QTY.	PART NUMBER	DESCRIPTION	VA	MANUF.
FC	2	R8239B1043	FANCENTER	--	HNYWELL
T1	2	TC1101	LINE VOLTAGE THERMOSTAT	--	INVENSYS
TX1	2	AT150F1022	120/24VAC TRANSFORMER, W/BREAKER	50	HNYWELL
V1	2	VA7313-201-4-02	24VAC,2-POS,3-WAY MIXING VALVE	18	INVENSYS

SEQUENCE OF OPERATION:

UPON A CALL FOR HEATING FROM THE ROOM T-STAT THE HWH COIL CONTROL VALVE WILL OPEN AND THE CABINET UNIT HEATER FAN WILL BE CYCLED ON. WHEN THE ROOM T-STAT SETPOINT IS REACHED, THE HWH COIL CONTROL VALVE WILL CLOSE AND THE CABINET UNIT HEATER FAN WILL BE CYCLED OFF.

VEF WIRING DIAGRAM

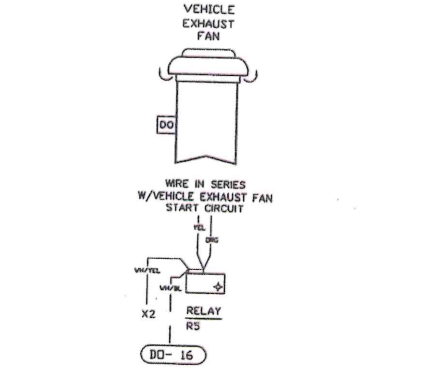

GAS FIRED INGRA-RED TUBE HEATER WIRING DIAGRAM

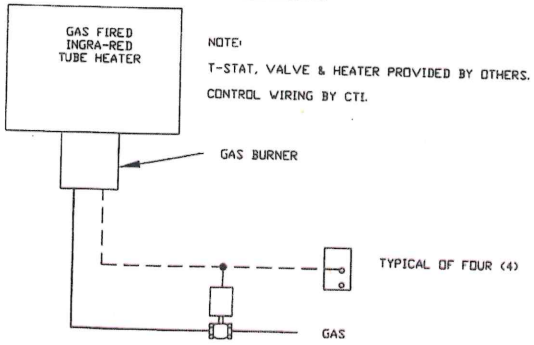

NOTE:

T-STAT, VALVE & HEATER PROVIDED BY OTHERS.

CONTROL WIRING BY CTI.

INCLUDE IN BASE BID

Anchor Bay School District
Transportation Center
51890 Washington, New Baltimore, MI 48047

SYSTEM:
CABINET UNIT HEATER & VEF CONTROL WIRING DIAGRAM

LAN ADDRESS 01

CTI CONTROLLED TEMPERATURE INC.
1897 BEST DRIVE , WALLED LAKE MICH. 48390 TEL. (248) 669-0500

FILE NAME:JOBS\ANCHOR BAY SCHOOLS\TRANSPORTATION CENTER\CUH VEF.dwg
DRAWN BY:KDS DATE:05/19/03 JOB NO:02.304 ASBUILT:07/24/03

08
PAGE NUMBER

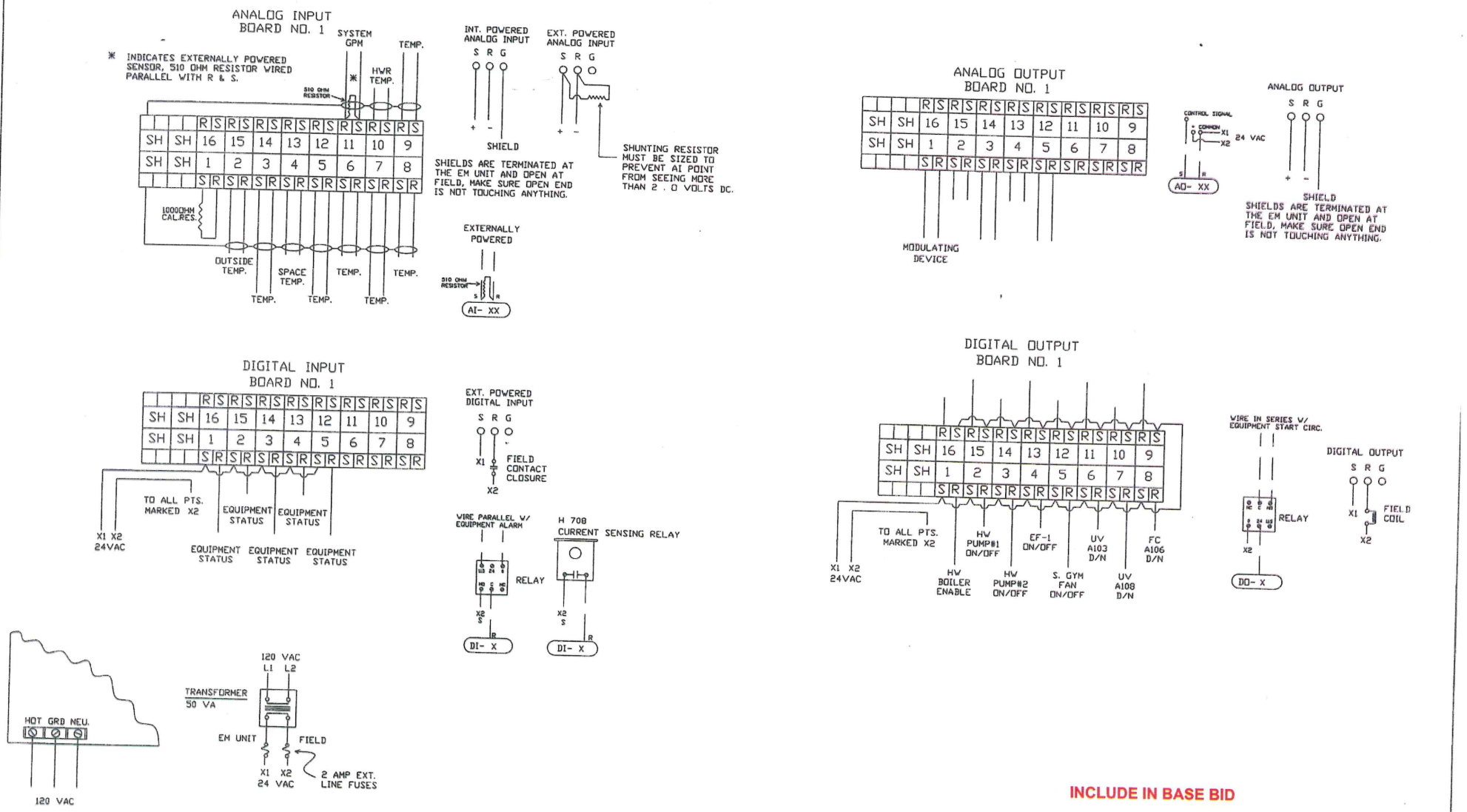

INCLUDE IN BASE BID

Anchor Bay School District
Transportation Center
51890 Washington, New Baltimore, MI 48047

SYSTEM: STANDARD TERMINATIONS

LAN ADDRESS 01

CTI CONTROLLED TEMPERATURE INC.
1897 BEST DRIVE , WALLED LAKE MICH. 48390 TEL. (248) 669-0500

FILE NAME:JOBS\ANCHOR BAY SCHOOLS\TRANSPORTATION CENTER\STANDARD TERMINATIONS.dwg
DRAWN BY:KDS DATE:03/27/03 JOB NO:02.304 ASBUILT:

09
PAGE NUMBER