Anchor Bay School District
Naldrett Elementary School

47800 Sugarbush Rd,
New Baltimore, MI 48047

Centrix Energy
792 Lois Dr.
Sun Prairie, WI 53590

Centrix

Centrix Energy
792 Lois Dr
Sun Prairie, WI 53590
(817) 508-8303

No.	Description	D

ANCHOR BAY
SCHOOL DISTRICT

DDC CONTROLS
UPGRADES

NALDRETT
ELEMENTARY
SCHOOL

REQUEST FOR PROPOSAL

MECHANICAL
COVER SHEET

REQUEST FOR PROPOSAL
Project Number:
Date: 3/13/202

M000

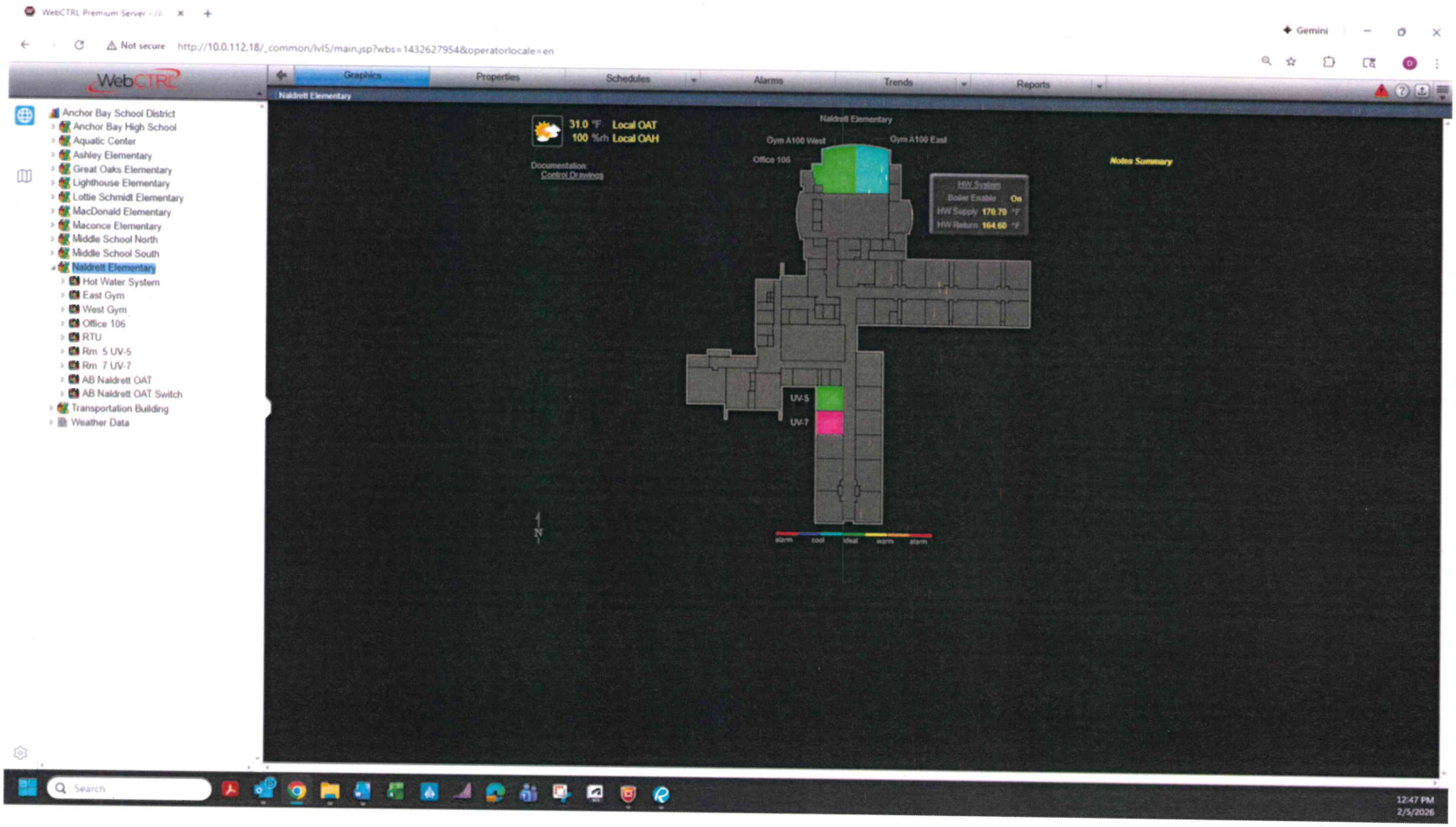

EXISTING DDC - ALC

Centrix

Centrix Energy
790 Lois Dr
Sun Prairie, WI 53590
(817) 506 8303

No.	Description	D

ANCHOR BAY SCHOOL DISTRICT

DDC CONTROLS UPGRADES

NALDRETT ELEMENTARY SCHOOL

REQUEST FOR PROPOSAL

EXISTING DDC - ALC

REQUEST FOR PROPOSAL
Project Number:
Date: 3/13/202

M001

Naldrett Elementary

Item #	Area Served	Legacy Control's Page Number	Notes
RTU-1	Speech / Supply		Include (3) zones w/ RH coils
RTU-2	Media Center		Include (2) zones w/ RH coils
RTU-3	Main Office Area	25 of 27	Include (2) zones w/ RH coils
RTU-2 (GYM)	Gym & MP		
UV's	Unit Ventilators (qty of 27)	18 of 27	
Radiant Panels	Varies	21 of 27	qty of 3
Hx	HWS Heat Exchanger	23 of 27	
FCU	Stage (qty of 2)		
FCU	Storage / Cordiator (Area B) (qty of 2)		
FCU	Corridor Kingergarten (Area D)		
EF's	Varies		qty of 12
CUH's	Varies		qty of 5
UH's	Varies		qyt of 5
FTR	Varies		qty of 2

Centrix

Centrix Energy
790 Lois Dr
Sun Prairie, WI 53590
(817) 506 8203

No.	Description	D

ANCHOR BAY SCHOOL DISTRICT

DDC CONTROLS UPGRADES

NALDRETT ELEMENTARY SCHOOL

REQUEST FOR PROPOSAL

EQUIPMENT SCHEDULE FOR DDC UPGRADE

REQUEST FOR PROPOSAL
Project Number:
Date: 3/13/202

M002

ControlPak Controllers
Qty of 2: Custodian
Qty of 1: Gym Storage

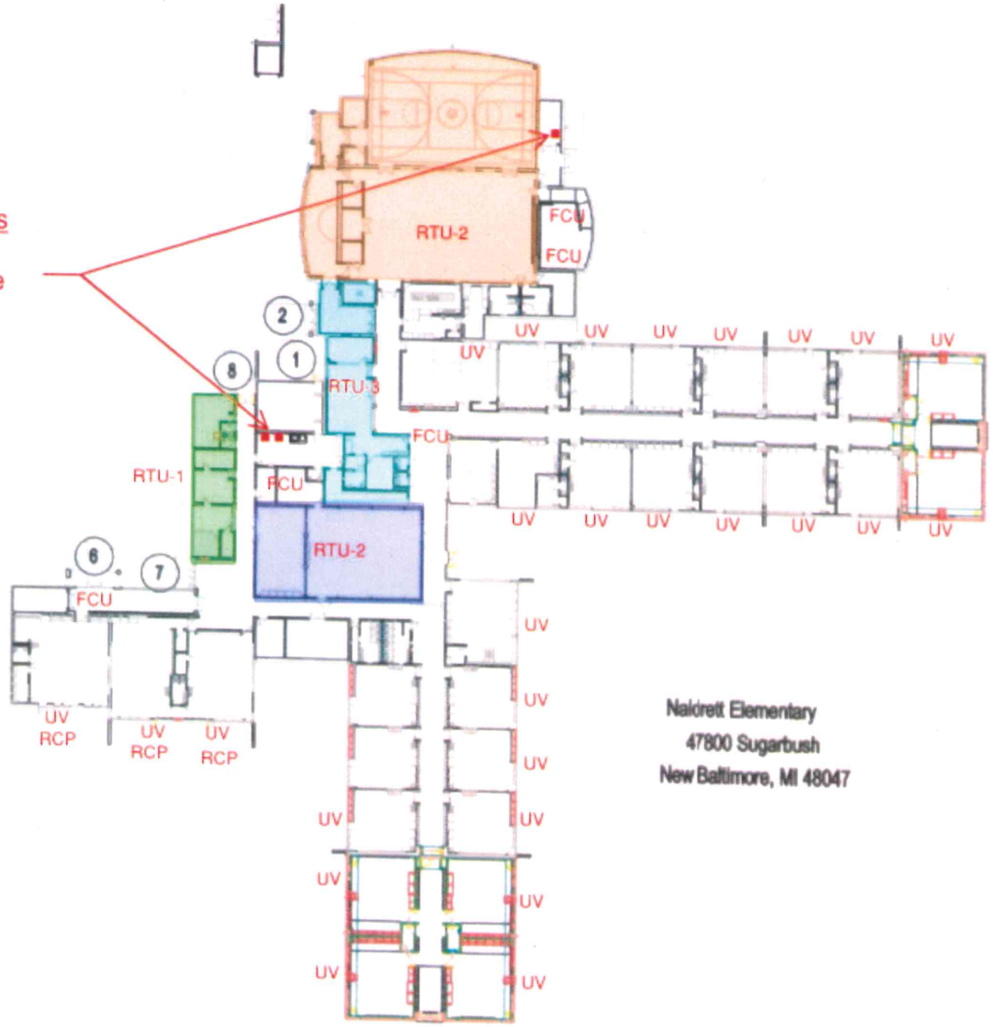

FLOORPLAN FOR DDC UPGRADE

Centri

Centrix Energy
792 Lois Dr
San Pierre, IN 46586
(817) 606 8203

No.	Description	D

ANCHOR BAY SCHOOL DISTRICT

DDC CONTROLS UPGRADES

NALDRETT ELEMENTARY SCHOOL

REQUEST FOR PROPOSAL

FLOORPLAN FOR DDC UPGRADE

REQUEST FOR PROPOSAL
Project Number:
Date: 3/13/202

M003

OWNER:

ANCHOR BAY SCHOOL DISTRICT

CONSULTING ENGINEERS

PETER BASSO ASSOCIATES, INC.

ARCHITECT PLANNERS INTERIORS

FRENCH ASSOCIATES

CONSTRUCTION MANAGERS

BARTON MALOW

MECHANICAL CONTRACTOR:

DUAL TEMP MECHANICAL & REFRIGERATION

DDC SYSTEM ARCHITECTURE

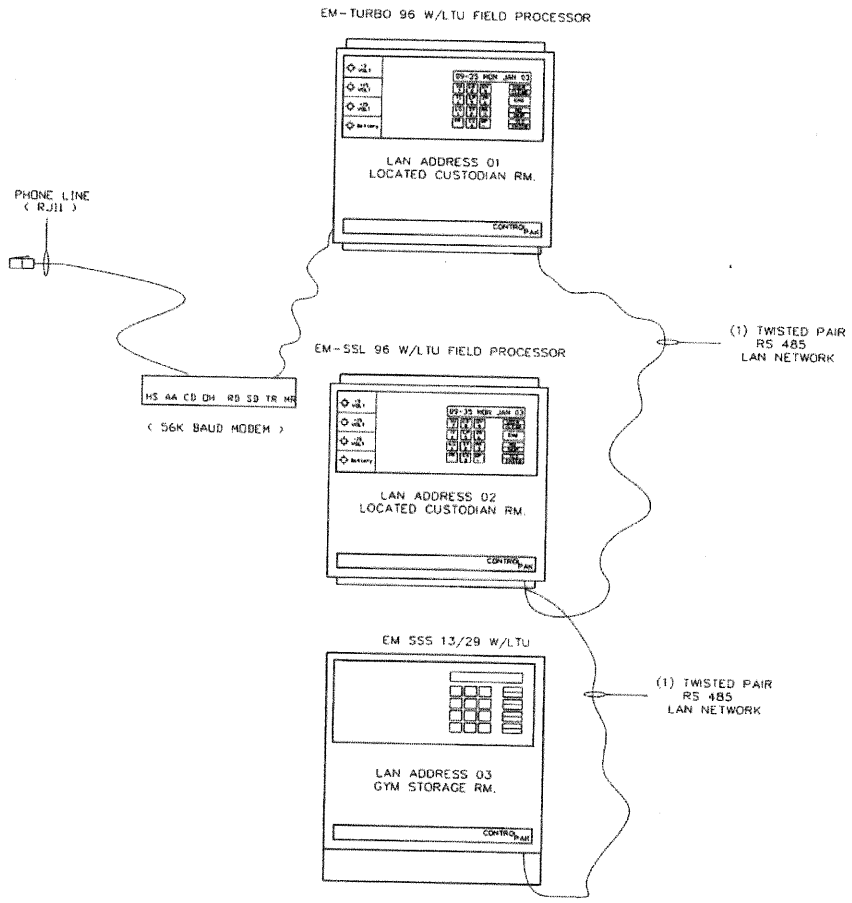

ANCHOR BAY SCHOOL DISTRICT *NALDRETT ELEMENTARY SCHOOL* ADDRESS: 47800 SUGARBUSH, NEW BALTIMORE, MI 48041	SYSTEM SYSTEM ARCHITECTURE/INDEX	CTI CONTROLLED TEMPERATURE INC. 1897 BEST DRIVE . WALLED LAKE MICH. 48390 TEL. (248) 669-0500 FILE NAME: TITLE BLOCK.dwg DRAWN BY: KDS DATE: 10-22-01 JOB NO. 00-138	01 PAGE NUMBER

EM TURBO 96 TERMINAL CONNECTIONS

LAN ADDRESS 01
LOC. BOILER ROOM

* INDICATES EXTERNALLY POWERED SENSOR, 510 OHM RESISTOR WIRED PARALLEL WITH R & S.

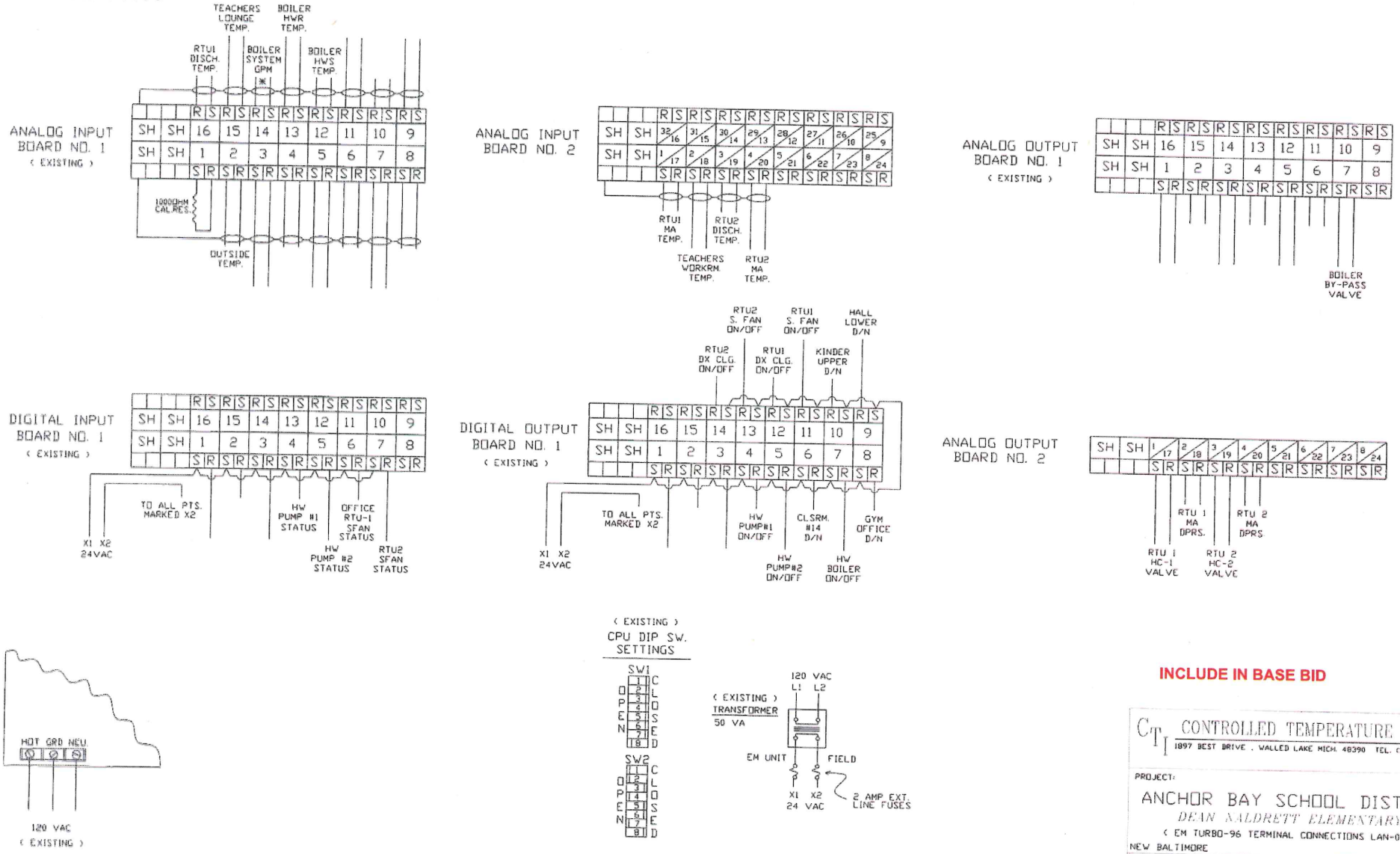

INCLUDE IN BASE BID

CONTROLLED TEMPERATURE INC.
1897 BEST DRIVE . WALLED LAKE MICH. 48390 TEL. (313) 669-0500

PROJECT:
ANCHOR BAY SCHOOL DISTRICT
DEAN MALDRETT ELEMENTARY
(EM TURBO-96 TERMINAL CONNECTIONS LAN-01)
NEW BALTIMORE MICHIGAN

DRAWN BY:	UPDATED	DATE		JOB NO.
THIS	10-19-01	5-17-94	SHEET 3 OF 14	HVAC-329

EM 48/192 WALL UNIT LAYOUT

LOCATED IN BOILER ROOM

FRONT VIEW

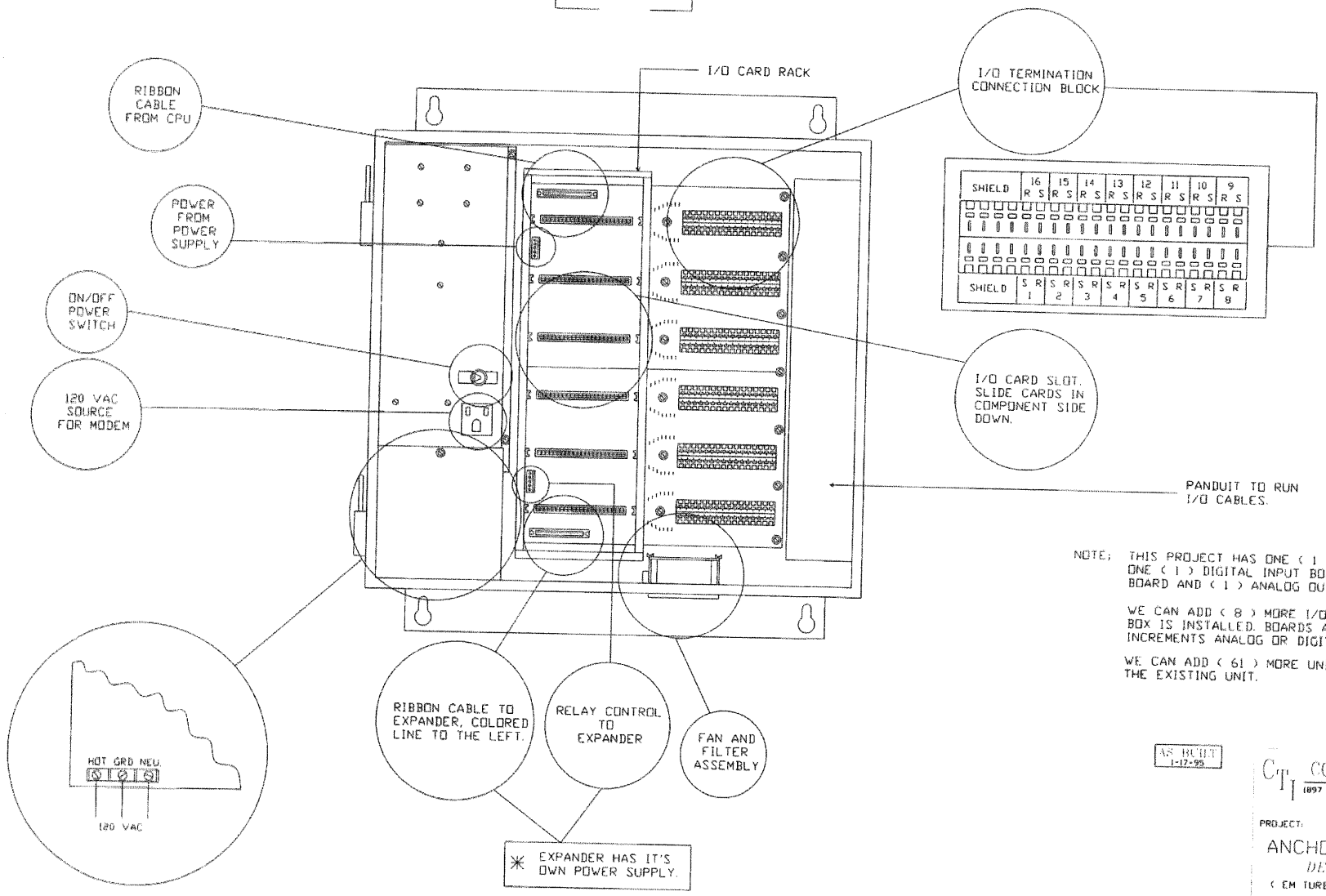

NOTE; THIS PROJECT HAS ONE (1) ANALOG INPUT BOARD, ONE (1) DIGITAL INPUT BOARD, (1) DIGITAL OUTPUT BOARD AND (1) ANALOG OUTPUT BOARD IN THE BASE UNIT.

WE CAN ADD (8) MORE I/O BOARDS IF AN EXPANDER BOX IS INSTALLED. BOARDS ARE ADDED IN (16) POINT INCREMENTS ANALOG OR DIGITAL.

WE CAN ADD (61) MORE UNITS AND NETWORK THEM TO THE EXISTING UNIT.

✳ EXPANDER HAS IT'S OWN POWER SUPPLY.

AS BUILT 1-17-95

CTI CONTROLLED TEMPERATURE INC.

1097 BEST DRIVE . WALLED LAKE MICH 48390 TEL (313) 669-0500

PROJECT:

ANCHOR BAY SCHOOL DISTRICT

DEAN WALDRETT ELEMENTARY

(EM TURBO-48/192 I/O CARD AND MOTHERBOARD LAYOUT)

NEW BALTIMORE MICHIGAN

DRAWN BY:	CHECKED BY:	DATE		JOB NO
THIS		5-17-94	SHEET 4 OF 14	HVAC-329

SEQUENCE OF OPERATION

BOILER HEATING SYSTEM CONTROL

THE PERIMETER HOT WATER HEATING (HWH) LOOP CIRCULATING PUMPS CP-1 AND CP-2 CIRCULATING PUMP MOTOR STARTER HAND/OFF/AUTO SWITCHES WILL BE PLACED IN THE " AUTO " POSITION. BOILERS B-1 THROUGH B-3 CONTROL SWITCHES WILL BE PLACED IN THE " ON " POSITION.

ONE PERIMETER HWH CICULATING PUMP (CP-1 OR CP-2) WILL BE DESIGNATED AS THE " LEAD " PUMP AND THE OTHER PUMP WILL BE DESIGNATED AS THE " STAND-BY " PUMP THROUGH OPERATOR COMMAND TO THE CONTROL PAK DDC SYSTEM.

THE BOILER CICULATING PUMP ON/OFF STATUS WILL BE PROVEN TO THE CONTROL PAK DDC SYSTEM BY MEANS OF THE PUMP MOTOR CURRENT SWITCH. IF A " LEAD " PUMP HAS FAILED AS SENSED BY THE PUMP MOTOR CURRENT SWITCH, CONTROL PAK DDC SYSTEM WILL AUTOMATICALLY ENERGIZE THE " STAND-BY " PUMP AND INDICATE A FAILURE ALARM. ONLY ONE PUMP WILL RUN AT ANY TIME. THE " LEAD " PUMP AND " STAND-BY " PUMP WILL BE ALTERNATED EVERY 1000 HOURS THROUGH THE CONTROL PAK DDC SYSTEM.

WHEN THE OUTSIDE AIR TEMPERATURE IS AT OR BELOW 60 DEGREES F. AS DETERMINED BY THE OUTSIDE AIR SENSOR, THE CONTROL PAK DDC SYSTEM WILL START THE " LEAD " HEATING CIRCULATING PUMP.

WHEN THE OUTSIDE AIR TEMPERATURE IS 60 DEGREES OR BELOW THE BOILER MASTER SEQUENCING PANEL WILL BE ACTIVATE THE BOILER CONTROL CIRCUITS AND FULLY MODULATE EACH BOILER IN SEQUENCE TO MAINTAIN THE HOT WATER HEATING SUPPLY TEMPERATURE. EACH INDIVIDUAL BOILER WILL NOT FIRE UNLESS FLOW IS PROVEN BY ITS FLOW SWITCH.

THE HWH SUPPLY TEMPERATURE WILL BE RESET BASED ON OUTSIDE AIR TEMP. RESET SCHEDULE PRE-PROGRAMMED IN THE BOILER MASTER SEQUENCING PANEL.

WHEN THE OUTSIDE AIR TEMPERATURE RISES ABOVE 60 DEGREES F. THE BOILER SYSTEM WILL DE-ACTAVATE.

THE HEATING HOT WATER FLOW METER THROUGH DDC WILL MODULATE THE BY-PASS CONTROL VALVE TO MAINTAIN CONSTANT FLOW THROUGH THE BOILERS.

DURING UNOCCUPIED HOURS WHEN THE OUTSIDE AIR TEMPERATURE IS BELOW 50 F. THE CONTROL PAK DDC SYSTEM WILL INITIATE BOILER LOW TEMPERATURE ALARM AND OR BOILER NO FLOW ALARM VIA PHONE MODEM TO THE OWNERS THIRD PARTY MONITORING DISPATCH COMPANY.

MECHANICAL BOILER ROOM HEATING AND VENTILATION CONTROL

ROOM THERMOSTAT WILL MODULATE HEATING VALVE TO MAINTAIN ROOM TEMP. UPON A CALL FOR HEATING FROM THE RDO THERMOSTAT THE FAN WILL BE CYCLED ON. WHEN THE ROOM THERMOSTATS SETPOINT IS REACHED, FAN WILL BE CYCLED OFF.

AQUASTAT WILL BE WIRED TO THE FAN TO PREVENT FAN OPERATION WHEN HEAT IS NOT AVAILABLE.

WHENEVER MECHANICAL ROOM TEMPERATURE RISES ABOVE 80 F. THE T-STAT WILL MODULATE THE HIGH AND LOW VENTILATION DAMPERS TOWARDS OPEN TO MAINTAIN ROOM TEMPERATURE.

BILL OF MATERIALS

ITEM #	QTY.	PART NUMBER	MANUFACTURER	DESCRIPTION
1	1	TK1001-403	BARBER COLMAN	PNEUMATIC THERMOSTAT SET @ 68 F.
2	2	TS8201	BARBER COLMAN	IMMERSION SENSOR
3	2	AT215	BARBER COLMAN	STAINLESS STEEL WELL
4	2	MK3121	BARBER COLMAN	DAMPER ACTUATOR 8 TO 13# SPRING
5	1	VK9223-603-5-14	BARBER COLMAN	4" TWO-WAY VALVE 300 GPM @ 20' HD
6	1	VK9211-201-4-04	BARBER COLMAN	1/2 " TWO WAY VALVE 8.5 GPM @ 15" HD
7	1	CP8551	BARBER COLMAN	TRANSDUCER 4 TO 20 Ma IN 3 TO 13# OUT
8	3	MR801/C	AIR PRODUCTS & CONTROLS.	SPDT ISOLATION RELAY (24 VAC OR 115 VAC COIL)
9	2	H708	VERIS INDUSTRIES	CURRENT SENSOR
10	1	A19DAC-1	JOHNSON CONTROLS	AQUASTAT SET @ 100 F.
11	1	P10BC-7	JOHNSON CONTROLS	P.E. RELAY SET @ 5#
12	1	24" X 8"	VENT PRODUCTS	FRESH AIR INTAKE DAMPER
13	1	18" X 18"	VENT PRODUCTS	RELIEF AIR DAMPER
14	1	6"	DIETERICH-STANDARD	ANNUBAR INSERTION PROBE
15	1	ABB 500T	KENT-TAYLOR	DIFFERENTIAL PRESSURE TRANSMITTER
16	1	ABB 200R	KENT-TAYLOR	DIGITAL INDICATOR

CONTROL VALVE SCHEDULE

ITEM #	QTY.	PART NUMBER	MANUFACTURER	SIZE	TYPE	GPM	CV	CALC. CV	ΔP FT.HD	RANGE #/VDC	SERVICE
1	1	VK9223-603-5-14	BARBER COLMAN	4"	2-WAY	300	145	118	20	8 - 13#	S-R BY-PASS
2	1	VK9211-201-4-04	BARBER COLMAN	1/2"	2-WAY	8.5	3.3	3.33	15	3 - 8#	BLR. RM. UH
3											
4											

AS BUILT 1-17-95

NOT INCLUDED IN DDC UPGRADES RFP - HWS & BOILER CONTROL HAS BEEN INCLUDED WITH BOILER REPLACEMENT PROJECT.

CTI CONTROLLED TEMPERATURE INC.
1897 BEST DRIVE , WALLED LAKE MICH. 48390 TEL. (313) 669-0500

PROJECT:
ANCHOR BAY SCHOOL DISTRICT
DEAN NALDRETT ELEMENTARY
(SEQUENCE OF OPERATION AND BILL OF MATERIALS)
NEW BALTIMORE MICHIGAN

DRAWN BY:	CHECKED BY:	DATE	SHEET	JOB NO.
THIS		5-17-94	5 OF 14	HVAC-329

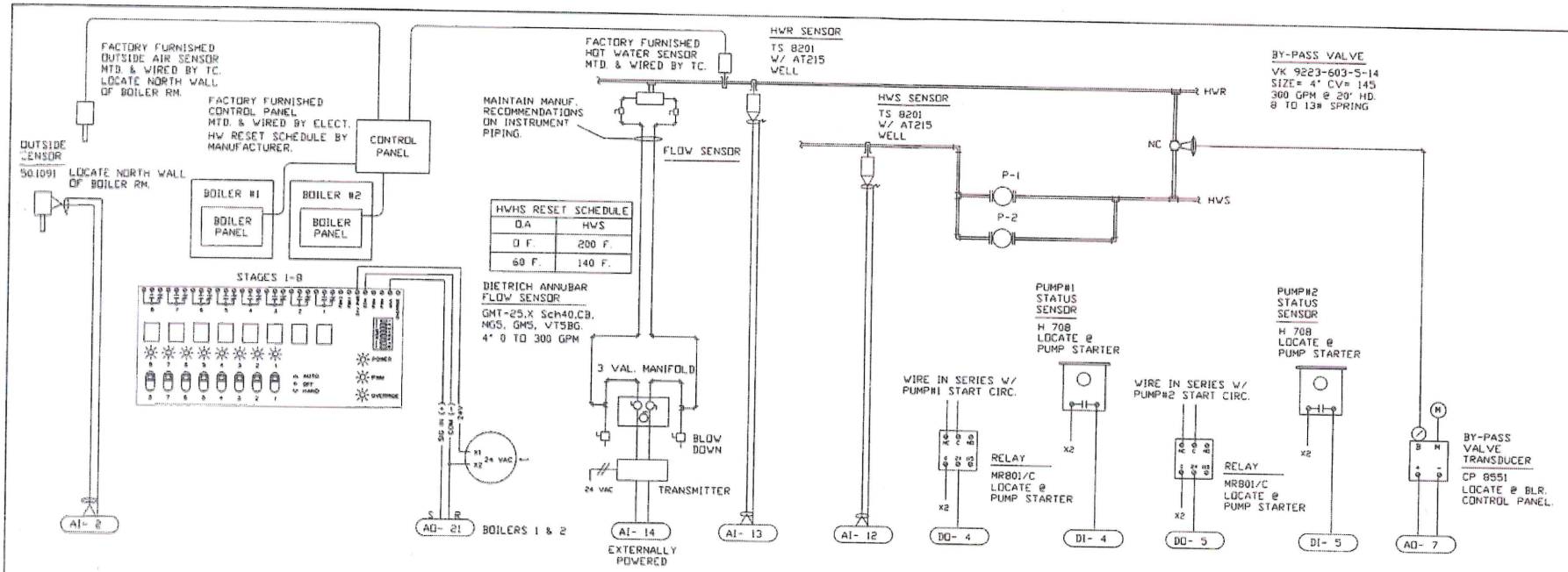

SEQUENCE OF OPERATION

THE HOT WATER HEATING (HWH) LOOP CIRCULATING PUMPS CP-1 AND CP-2 CIRCULATING PUMP MOTOR STARTER HAND/OFF/AUTO SWITCHES WILL BE IN THE "AUTO" POSITION. BOILERS B-1 AND B-2 CONTROL SWITCHES WILL BE PLACED IN THE "ON" POSITION.

ONE HWH CIRCULATING PUMP (CP-1 OR CP-2) WILL BE DESIGNATED AS THE "LEAD" PUMP AND THE OTHER PUMP WILL BE DESIGNATED AS THE "STANDBY" PUMP THROUGH OPERATOR COMMAND TO THE DDC SYSTEM.

THE BOILER CIRCULATING PUMP "ON/OFF" STATUS WILL BE PROVEN TO THE DDC SYSTEM BY MEANS OF THE PUMP MOTOR CURRENT SWITCH. IF THE "LEAD" PUMP HAS FAILED (AS SENSED BY THE PUMP MOTOR CURRENT SWITCH) THE DDC SYSTEM WILL AUTOMATICALLY ENERGIZE THE "STANDBY" PUMP AND INDICATE A PUMP FAILURE ALARM. ONLY ONE PUMP WILL RUN AT ANY TIME. THE LEAD PUMP AND STANDBY PUMP WILL BE ALTERNATED EVERY 1000 HOURS THROUGH THE DDC SYSTEM.

WHEN THE OUTSIDE AIR TEMPERATURE IS AT 60°F. OR BELOW THE DDC SYSTEM WILL START THE "LEAD" CIRCULATING PUMP.

WHEN THE OUTSIDE AIR TEMPERATURE IS 60°F. OR BELOW THE BOILER MASTER SEQUENCING PANEL WILL ACTIVATE OR DE-ACTIVATE THE BOILER CONTROL CIRCUITS AND FULLY MODULATE EACH BOILER INDIVIDUALLY IN SEQUENCE TO MAINTAIN THE HOT WATER HEATING SUPPLY TEMPERATURE. EACH INDIVIDUAL BOILER WILL NOT FIRE UNLESS FLOW IS PROVEN BY ITS FLOW SWITCH.

THE HWH SUPPLY TEMPERATURE WILL BE RESET BASED ON THE OUTSIDE AIR TEMPERATURE RESET SCHEDULE PRE-PROGRAMMED IN THE BOILER MASTER SEQUENCE PANEL.

WHEN THE OUTSIDE AIR TEMPERATURE RESIS ABOVE 60°F. THE BOILER SYSTEM WILL DE-ACTIVATE.

HEATING HOT WATER FLOW METER THROUGH DDC WILL MODULATE THE BYPASS CONTROL VALVE TO MAINTAIN CONSTANT FLOW THROUGH THE BOILERS.

TYPICAL HW PUMP STARTER WIRING

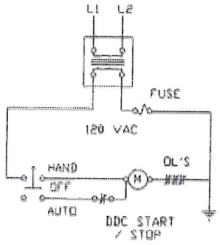

NOT INCLUDED IN DDC UPGRADES RFP - HWS & BOILER CONTROL HAS BEEN INCLUDED WITH BOILER REPLACEMENT PROJECT.

ANCHOR BAY SCHOOL DISTRICT VALDRETT ELEMENTARY SCHOOL ADDRESS: 47800 SUGARBUSH, NEW BALTIMORE, MI 48041	SYSTEM: BOILER AND HW HEATING CONTROL LAN ADDRESS 01	CT I CONTROLLED TEMPERATURE INC 1897 BEST DRIVE , WALLED LAKE MICH. 48390 TEL (248) 669-0500 FILE NAME: BOILERS.dwg DRAWN BY: KDS DATE: 010-09-01 JOB NO. 00-138	05 PAGE NUMBER

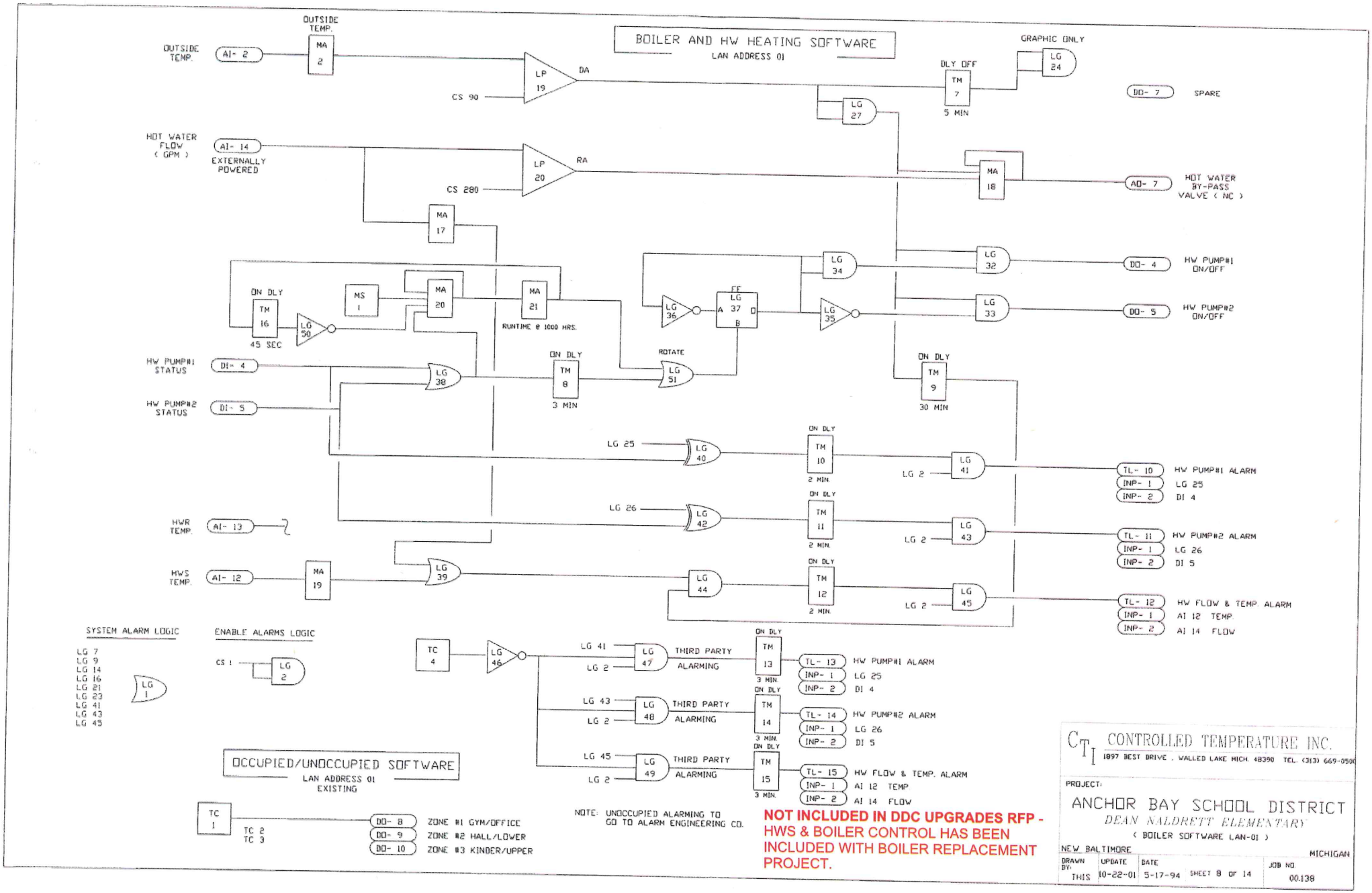
BOILER AND HW HEATING SOFTWARE
LAN ADDRESS 01
OUTSIDE TEMP.
AI- 2
OUTSIDE TEMP.
MA 2
LP 19
CS 90
DA
DLY OFF
TM 7
5 MIN
GRAPHIC ONLY
LG 24
DO- 7
SPARE
LG 27
HOT WATER FLOW (GPM)
AI- 14
EXTERNALLY POWERED
LP 20
CS 280
RA
MA 18
AO- 7
HOT WATER BY-PASS VALVE (NC)
MA 17
LG 34
LG 32
DO- 4
HW PUMP#1 ON/OFF
ON DLY
TM 16
45 SEC
LG 50
MS 1
MA 20
MA 21
RUNTIME @ 1000 HRS.
LG 36
FF
LG 37
A
B
Q
LG 35
LG 33
DO- 5
HW PUMP#2 ON/OFF
HW PUMP#1 STATUS
DI- 4
HW PUMP#2 STATUS
DI- 5
LG 38
ON DLY
TM 8
3 MIN
ROTATE
LG 51
ON DLY
TM 9
30 MIN
LG 25
LG 40
ON DLY
TM 10
2 MIN.
LG 2
LG 41
TL- 10
INP- 1
INP- 2
HW PUMP#1 ALARM
LG 25
DI 4
LG 26
LG 42
ON DLY
TM 11
2 MIN.
LG 2
LG 43
TL- 11
INP- 1
INP- 2
HW PUMP#2 ALARM
LG 26
DI 5
HWR TEMP.
AI- 13
HWS TEMP.
AI- 12
MA 19
LG 39
LG 44
ON DLY
TM 12
2 MIN.
LG 2
LG 45
TL- 12
INP- 1
INP- 2
HW FLOW & TEMP. ALARM
AI 12 TEMP.
AI 14 FLOW
SYSTEM ALARM LOGIC
LG 7
LG 9
LG 14
LG 16
LG 21
LG 23
LG 41
LG 43
LG 45
LG 1
ENABLE ALARMS LOGIC
CS 1
LG 2
TC 4
LG 46
LG 41
LG 2
LG 47
THIRD PARTY ALARMING
ON DLY
TM 13
3 MIN.
TL- 13
INP- 1
INP- 2
HW PUMP#1 ALARM
LG 25
DI 4
LG 43
LG 2
LG 48
THIRD PARTY ALARMING
ON DLY
TM 14
3 MIN.
TL- 14
INP- 1
INP- 2
HW PUMP#2 ALARM
LG 26
DI 5
LG 45
LG 2
LG 49
THIRD PARTY ALARMING
ON DLY
TM 15
3 MIN.
TL- 15
INP- 1
INP- 2
HW FLOW & TEMP. ALARM
AI 12 TEMP
AI 14 FLOW
OCCUPIED/UNOCCUPIED SOFTWARE
LAN ADDRESS 01
EXISTING
TC 1
TC 2
TC 3
DO- 8
DO- 9
DO- 10
ZONE #1 GYM/OFFICE
ZONE #2 HALL/LOWER
ZONE #3 KINDER/UPPER
NOTE: UNOCCUPIED ALARMING TO GO TO ALARM ENGINEERING CO.
NOT INCLUDED IN DDC UPGRADES RFP - HWS & BOILER CONTROL HAS BEEN INCLUDED WITH BOILER REPLACEMENT PROJECT.
CTI CONTROLLED TEMPERATURE INC.
1897 BEST DRIVE . WALLED LAKE MICH. 48390 TEL. (313) 669-0500
PROJECT:
ANCHOR BAY SCHOOL DISTRICT
DEAN NALDRETT ELEMENTARY
(BOILER SOFTWARE LAN-01)
NEW BALTIMORE
MICHIGAN
DRAWN BY: THIS
UPDATE 10-22-01
DATE 5-17-94
SHEET 8 OF 14
JOB NO. 00.138

BOILER AND HW HEATING SOFTWARE

LAN ADDRESS 01

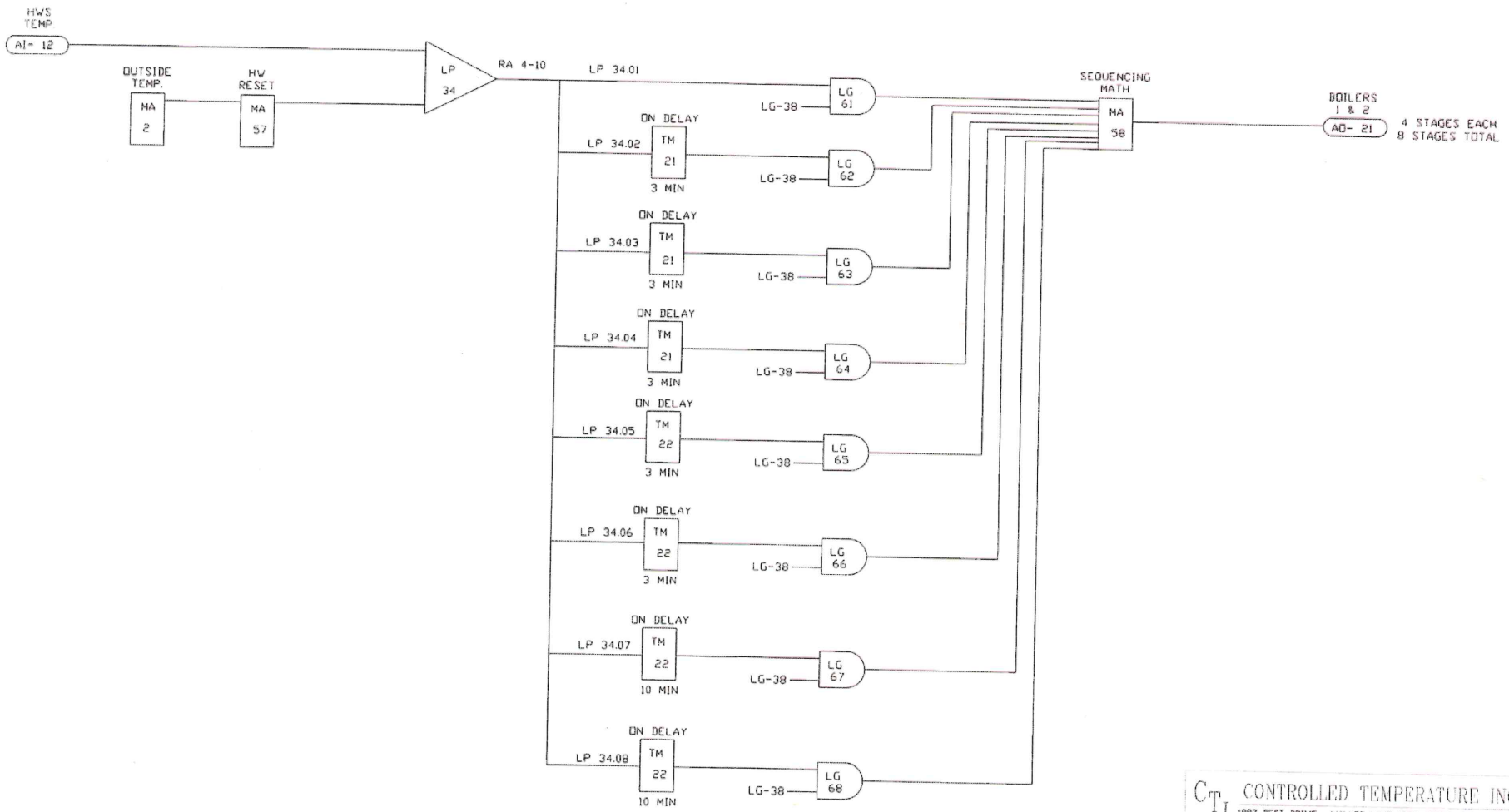

NOT INCLUDED IN DDC UPGRADES RFP - HWS & BOILER CONTROL HAS BEEN INCLUDED WITH BOILER REPLACEMENT PROJECT.

CTI CONTROLLED TEMPERATURE INC.
1897 BEST DRIVE , WALLED LAKE MICH. 48390 TEL. (313) 669-0500

PROJECT:
ANCHOR BAY SCHOOL DISTRICT
DEAN NALDRETT ELEMENTARY
(BOILER SOFTWARE LAN-01)
NEW BALTIMORE MICHIGAN

DRAWN BY:	UPDATE	DATE	SHEET	JOB NO.
KDS	11-11-03			00.138

RTU #1 & 2 AND UNIT VENTILATOR SEQUENCE OF OPERATION

ROOF TOP UNIT CONTROL

WITH THE SUPPLY FAN MOTOR STARTER HAND/OFF/AUTO SWITCH IN THE "AUTO" POSTION, THE RTU SUPPLY FAN WILL BE AUTOMATICALLY STARTED AND STOPPED THROUGH THE CONTROL PAK DDC SYSTEM AT THE OCCUPANCY HOUR BASED ON THE PRE-PROGRAMMED OCCUPANCY SCHEDULE.

WHENEVER THE SUPPLY FAN IS STARTED THE OUTSIDE AIR DAMPERS WILL OPEN TO MINIMUM POSITION (ADJUSTABLE) AS PROGRAMMED THROUGH THE DDC SYSTEM.

PROOF OF FLOW STATUS FOR THE SUPPLY FAN WILL BE PROVEN TO THE CONTROL PAK DDC SYSTEM BY MEANS OF THE SUPPLY FAN MOTOR CURRENT SWITCH.

THE OPTIMUM START PROGRAM WILL DETERMINE THE OPTIMUM START TIME REQUIRED TO ATTAIN DESIRED SPACE TEMPERATURE AT OCCUPANCY TIME. WHEN OUTSIDE AIR TEMPERATURE IS ABOVE 50 DEGREE'S F., THE OPTIMUM START TIME WILL BE EQUAL TO THE OCCUPANCY TIME.

WHEN THE SYSTEM IS STARTED BY THE OPTIMUM START PROGRAM PRIOR TO THE OCCUPANCY TIME, THE WARM-UP CYCLE PROGRAM WILL FULLY CLOSE THE OUTSIDE AIR DAMPER AND FULLY OPEN THE RETURN AIR DAMPER. WHEN THE WARM-UP CYCLE IS COMPLETED AND DESIRED SPACE TEMPERATURE IS REACHED, THE OUTSIDE AIR DAMPERS WILL OPENTO MINIMUM POSITION OR AS REQUIRED TO MAINTAIN THE DESIRED TEMPERATURE AS PROGRAMMED BY THE DDC SYSTEM.

THE DISCHARGE AIR SENSOR THROUGH THE DDC WILL CONTROL THE DX COOLING COIL, THE MIXED AIR DAMPERS AND THE HEATING COIL CONTROL VALVE IN SEQUENCE TO MAINTAIN A DISCHARGE TEMPERATURE SETPOINT. THE DISHARGE AIR TEMPERATURE SETPOINT WILL BE RESET BASED ON SPACE TEMPERATURE FEEDBACK FROM THE SPACE TEMPERATURE SENSOR AND LIMITED BY THE DISCHARGE AIR SENSOR.

DURING THE UNOCCUPIED MODE THE UNIT WILL BE CYCLED WITH THE OUTSIDE AIR DAMPERS CLOSED BASED ON SPACE TEMPERATURE FEEDBACK TO MAINTAIN A NIGHT SETBACK TEMPERATURE OF 58 DEGREE'S F. (WINTER ONLY)

WHENEVER THE SUPPLY FAN IS DE-ENERGIZED, THE OUTSIDE AIR DAMPERS WILL BE CLOSED AND DX COOLING COIL WILL BE DE-ENERGIZED.

SMOKE DETECTOR AND FREEZESTAT WILL DE-ENERGIZE THE FANS WHEN THIER SETPOINTS ARE REACHED.

UNIT VENTILATOR CONTROL

THE CONTROL PAK DDC SYSTEM WILL ISSUE COMMAND TO THE UNIT VENTILATOR CONTROLLER TO ENERGIZE OR DE-ENERGIZE THE OCCUPIED OR UNOCCUPIED MODE.

DURING THE WARM-UP CYCLE THE OUTSIDE AIR DAMPER AND RELIEF AIR DAMPER WILL BE FULLY CLOSED AND THE RETURN AIR DAMPER WILL BE FULLY OPEN.

WHEN THE WARM-UP CYCLE IS COMPLETED AND THE DESIRED SPACE TEMPERATURE IS REACHED, THE OUTSIDE AIR DAMPER WILL OPEN TO MINIMUM POSTION OR AS REQUIRED. THE HEATING COIL VALVE WILL BE MODULATED THROUGH THE UNIT VENTILATOR CONTROLLER TO MAINTAIN THE DESIRED SPACE TEMPERATURE.

WHEN THE SPACE TEMPERATURE EXCEEDS ITS SETPOINT AND THE HEATING COIL CONTROL VALVE IS FULLY CLOSED THROUGH THE UNIT VENTILATOR CONTROLLER. THE OUTSIDE AIR DAMPER WILL MODULATE FULLY OPEN TO MAINTAIN SPACE TEMPERATURE. THE DISCHARGE AIR SENSOR WILL OVERRIDE THE SPACE SENSOR THROUGH THE DDC CONTROLLER TO MAINTAIN A MINIMUM DISCHARGE AIR TEMPERATURE OF 55 DEGREE'S F. (ADJUSTABLE)

IF THE SPACE TEMPERATURE CONTINUES TO EXCEED ITS SETPOINT WHEN OUTSIDE AIR DAMPERS ARE FULLY OPEN AND THE OUTSIDE AIR TEMPERATURE IS ABOVE 55 F. THEN THE MECHANICAL COOLING WILL OCCUR. THE OUTSIDE AIR DAMPERS WILL CLOSE TO A MINIMUM POSITION AND THE SPACE SENSOR WILL CYCLE THE CONDENSING UNIT THROUGH THE UNIT VENTILATOR CONTROLLER TO MAINTAIN SPACE TEMPERATURE.

DURING THE UNOCCUPIED PERIOD THE UNIT VENTILATOR WILL CYCLE IN FULL RECIRCULATION MODE TO MAINTAIN NIGHT SETBACK TEMPERATURE AS DETERMINED THROUGH THE UNIT VENT DDC CONTROLLER.

INCLUDE IN BASE BID

CTI CONTROLLED TEMPERATURE INC.
1897 BEST DRIVE , WALLED LAKE MICH. 48390 TEL: (313) 669-0500

PROJECT:

ANCHOR BAY SCHOOL DISTRICT
DEAN NALDRETT ELEMENTARY
(RTU'S AND UNIT VENT SEQUENCE OF OPERATION)

NEW BALTIMORE MICHIGAN

DRAWN BY:	CHECKED BY:	DATE	SHEET	JOB NO
THIS		6-8-95	SHEET 11 OF 14	HVAC-329

ROOF TOP UNIT #1 & 2 OFFICE CONTROL

LAN ADDRESS 01
SERVES MAIN OFFICE AREA

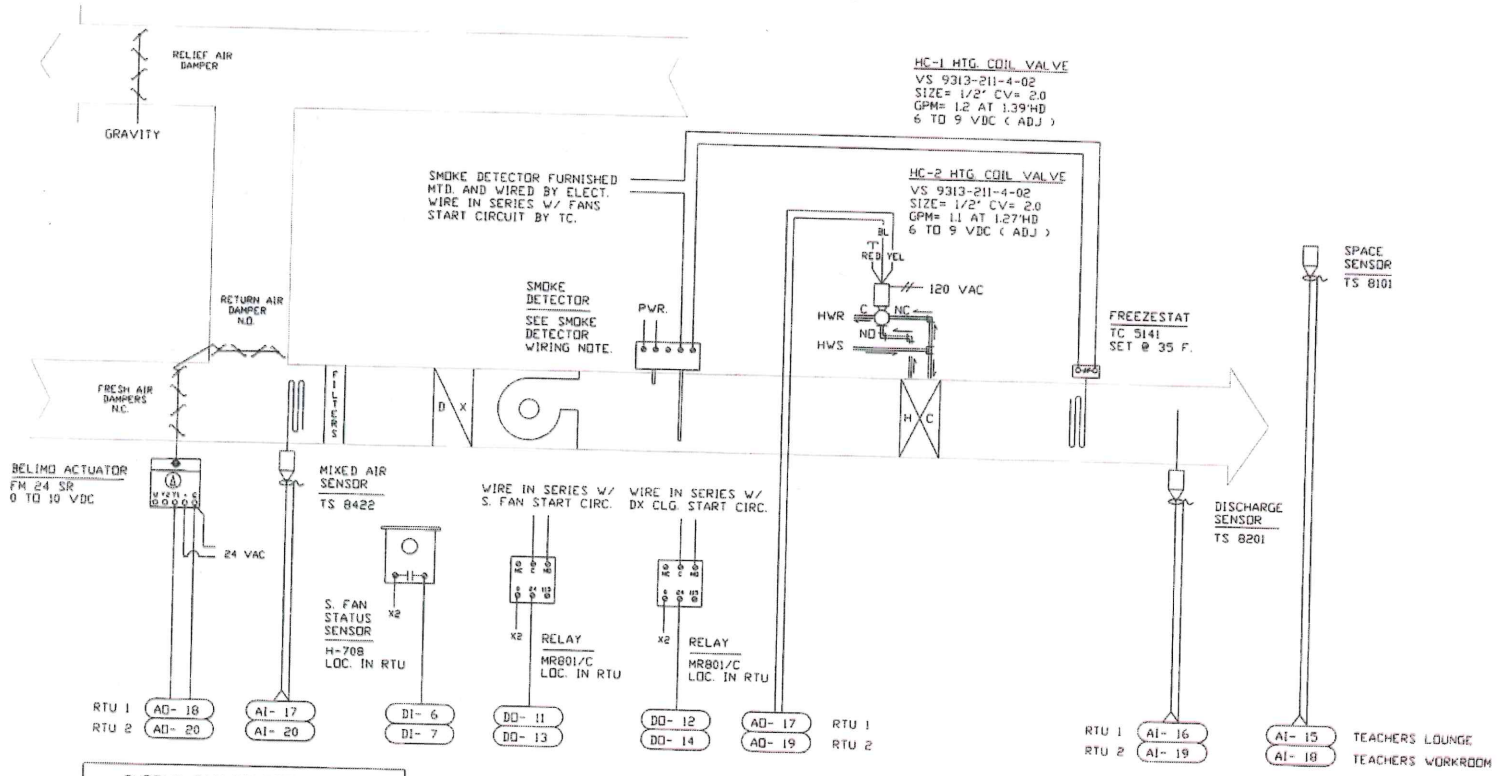

SUPPLY FAN STARTER WIRING

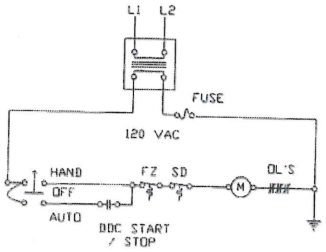

INCLUDE IN BASE BID

CTI CONTROLLED TEMPERATURE INC.
1897 BEST DRIVE , WALLED LAKE MICH. 48390 TEL. (313) 669-0500

PROJECT:
ANCHOR BAY SCHOOL DISTRICT
DEAN MALDRETT ELEMENTARY
(ROOF TOP UNIT #1 & 2 OFFICE CONTROL LAN-01)
NEW BALTIMORE MICHIGAN

DRAWN BY:	UPDATED	DATE	SHEET 12 OF 14	JOB NO.
TMS.	10-22-01	6-8-95		HVAC-329

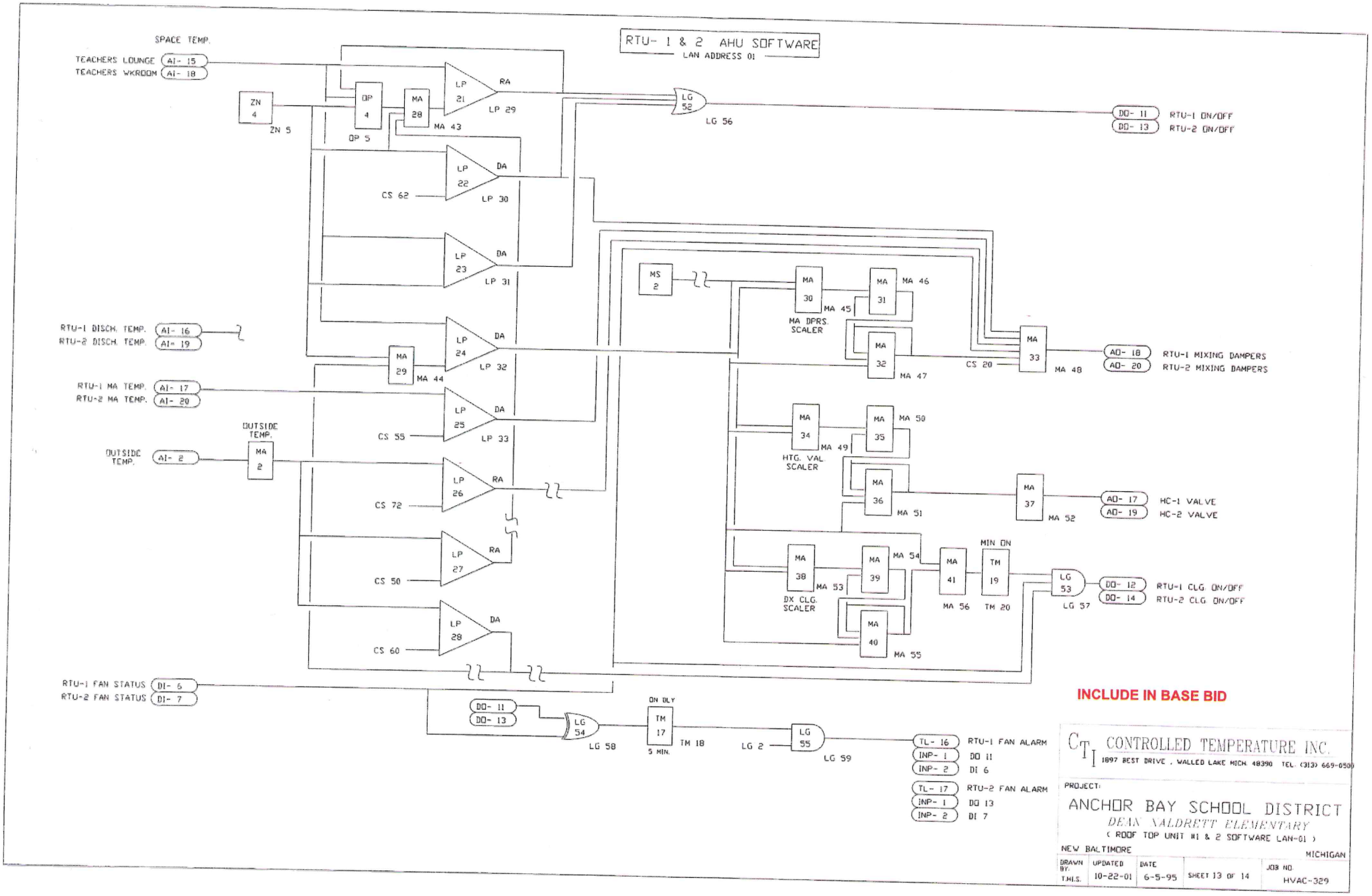
RTU- 1 & 2 AHU SOFTWARE
LAN ADDRESS 01
SPACE TEMP.
TEACHERS LOUNGE AI- 15
TEACHERS WKROOM AI- 18
ZN 4
ZN 5
OP 4
OP 5
MA 28
MA 43
LP 21
RA
LP 29
LG 52
LG 56
DO- 11 RTU-1 ON/OFF
DO- 13 RTU-2 ON/OFF
LP 22
DA
CS 62
LP 30
LP 23
DA
LP 31
RTU-1 DISCH. TEMP. AI- 16
RTU-2 DISCH. TEMP. AI- 19
MA 29
MA 44
LP 24
DA
LP 32
RTU-1 MA TEMP. AI- 17
RTU-2 MA TEMP. AI- 20
LP 25
DA
CS 55
LP 33
OUTSIDE TEMP.
OUTSIDE TEMP. AI- 2
MA 2
LP 26
RA
CS 72
LP 27
RA
CS 50
LP 28
DA
CS 60
RTU-1 FAN STATUS DI- 6
RTU-2 FAN STATUS DI- 7
MS 2
MA 30
MA 45
MA DPRS. SCALER
MA 31
MA 46
MA 32
MA 47
CS 20
MA 33
MA 48
AO- 18 RTU-1 MIXING DAMPERS
AO- 20 RTU-2 MIXING DAMPERS
MA 34
MA 49
HTG. VAL. SCALER
MA 35
MA 50
MA 36
MA 51
MA 37
MA 52
AO- 17 HC-1 VALVE
AO- 19 HC-2 VALVE
MA 38
MA 53
DX CLG. SCALER
MA 39
MA 54
MA 40
MA 55
MA 41
MA 56
MIN ON
TM 19
TM 20
LG 53
LG 57
DO- 12 RTU-1 CLG. ON/OFF
DO- 14 RTU-2 CLG. ON/OFF
DO- 11
DO- 13
LG 54
LG 58
ON DLY
TM 17
5 MIN.
TM 18
LG 2
LG 55
LG 59
TL- 16 RTU-1 FAN ALARM
INP- 1 DO 11
INP- 2 DI 6
TL- 17 RTU-2 FAN ALARM
INP- 1 DO 13
INP- 2 DI 7
INCLUDE IN BASE BID
CTI CONTROLLED TEMPERATURE INC.
1897 BEST DRIVE , WALLED LAKE MICH. 48390 TEL. (313) 669-0500
PROJECT:
ANCHOR BAY SCHOOL DISTRICT
DEAN VALDRETT ELEMENTARY
(ROOF TOP UNIT #1 & 2 SOFTWARE LAN-01)
NEW BALTIMORE
MICHIGAN
DRAWN BY: T.H.S.
UPDATED 10-22-01
DATE 6-5-95
SHEET 13 OF 14
JOB NO. HVAC-329

UNIT VENTILATOR DAY/NIGHT CHANGE-OVER SOFTWARE

LAN ADDRESS 01

UNIT VENTILATOR CONTROL

ONE LIKE THIS
LAN ADDRESS 01

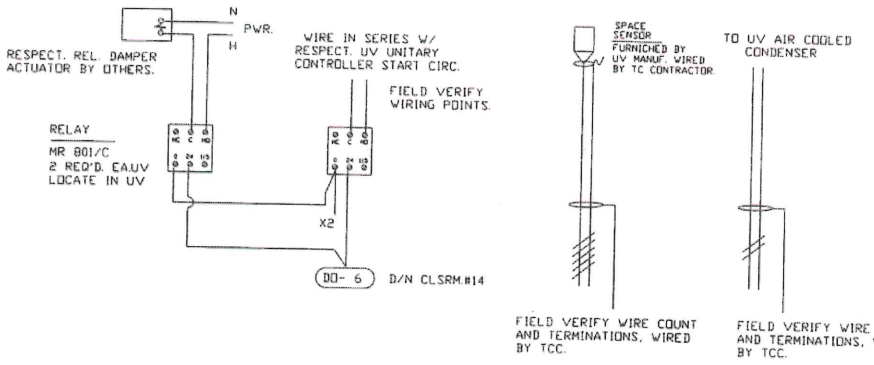

INCLUDE IN BASE BID

CTI CONTROLLED TEMPERATURE INC.
1897 BEST DRIVE , WALLED LAKE MICH. 48390 TEL. (313) 669-0500

PROJECT:

ANCHOR BAY SCHOOL DISTRICT
DEAN NALDRETT ELEMENTARY
(UNIT VENT CONTROL & SOFTWARE)

NEW BALTIMORE MICHIGAN

DRAWN BY:	CHECKED BY:	DATE	SHEET	JOB NO.
THIS		6-8-95	SHEET 14 OF 14	HVAC-329

ARCHITECT & PLANNERS : ROY G. FRENCH ASSOCIATES, INC.

CONSULTING ENGINEERS : PETER BASSO ASSOCIATES INC.

CONTRUCTION MANAGEMENT : BARTON MALOW COMPANY

MECHANICAL CONTRACTOR : DUAL TEMP MECHANICAL AND REFRIGERATION

LAN 02

ANCHOR BAY SCHOOL DISTRICT *DEAN NALDRETT ELEMENTARY SCHOOL*	SYSTEM: TITLE PAGE LAN ADDRESS 02	CTI CONTROLLED TEMPERATURE INC. 1897 BEST DRIVE , WALLED LAKE MICH. 48390 TEL. (248) 669-0500 FILE NAME: ABDN0201 ASBUILT BY: KDS DATE: 09-21-00 JOB NO. 98-253

ANALOG INPUT BOARD #01

AI#	POINT DESCRIPTION	EQUIPMENT	AREA SERVED
01	CALIBRATION RESISTOR	EM UNIT	BUILDING
02	DA TEMP.	RTU-1	OFFICE
03	SPACE TEMP.	TC-1	LEAP ROOM
04	SPACE TEMP.	TC-2	SPEECH ROOM
05	SPACE TEMP.	TC-3	BOOK ROOM
06	DA TEMP.	RTU-2	MEDIA ROOM
07	RA TEMP.	RTU-2	MEDIA ROOM
08	SPACE TEMP.	TC-4	MEDIA EAST
09	SPACE TEMP.	TC-5	MEDIA WEST
10	SPACE TEMP.	FCU	CONF. ROOM
11	SPACE TEMP.	RCP	KINDERGARTEN STG
12	SPACE TEMP.	RCP	KINDERGARTEN
13	SPACE TEMP.		CORRIDOR
14	HWS TEMP.	HX-1	
15	SPARE		
16	SPARE		

ANALOG INPUT BOARD #02

AI#	POINT DESCRIPTION	EQUIPMENT	AREA SERVED
17	M.A. TEMP.	RTU-3	OFFICE
18	D.A. TEMP.	RTU-3	OFFICE
19	SPACE TEMP.	RHC	PRINCIPAL B130
20	SPACE TEMP.	RHC	CLERICAL B128
21	R.A. TEMP.	RTU-3	OFFICE
22	SPACE TEMP.	RHC, RTU4	OFFICE A112
23	SPACE TEMP.	RHC, RTU4	CAFETERIA A105
24	SPACE TEMP.	RHC, RTU4	LOBBY A109
25	RTU-1 STATUS	RTU-1	
26	RTU-2 STATUS	RTU-2	
27	CP-3 STATUS	CP-3	BUILDING
28	CP-4 STATUS	CP-4	BUILDING
29	RTU-3 FILTER	RTU-3	
30	RTU-3 STATUS	RTU-4	
31	SPARE		
32	SPARE		

DIGITAL OUTPUT BOARD #01

DO#	POINT DESCRIPTION	EQUIPMENT	AREA SERVED
01	UV OCC/UNOCC	UNIT VENTS	AREA "A"
02	UV OCC/UNOCC	UNIT VENTS	AREA "B"
03	UV OCC/UNOCC	UNIT VENTS	AREA "C"
04	UV OCC/UNOCC	UNIT VENTS	AREA "D"
05	S. FAN ON/OFF	RTU-1	OFFICE
06	1ST STAGE CLG.	RTU-1	ROOMS
07	S. FAN ON/OFF	RTU-2	MEDIA
08	1ST STAGE CLG.	RTU-2	MEDIA
09	2ND STAGE CLG.	RTU-2	MEDIA
10	1ST STAGE CLG.	RTU-3	OFFICE
11	NOT FUNCTIONAL		
12	EF-1&2 ON/OFF	EF'S 1&2	AREA "A & B"
13	EF-3 ON/OFF	EF-3	AREA "C"
14	EF-4 ON/OFF	EF-4	AREA "D"
15	FCU ON/OFF	FCU	CORR.
16	FCU ON/OFF	FCU	MEDIA OFFICE

ANALOG OUTPUT BOARD #01

AO#	POINT DESCRIPTION	EQUIPMENT	AREA SERVED
01	HW VALVE	RTU-1	OFFICE
02	HW VALVE	TC-1	LEAP ROOM
03	HW VALVE	TC-2	SPEECH ROOM
04	HW VALVE	TC-3	BOOK ROOM
05	HW VALVE	TC-4	MEDIA WEST
06	HW VALVE	TC-5	MEDIA EAST
07	SPARE		
08	HW VALVE	RCP	KNDRGRTN STORAG
09	HW VALVE	RCP	KINDERGRTN
10	HW VALVE	RCP	CORRIDOR
11	HW VALVE	HX-1	
12	SPARE		
13	SPARE		
14	SPARE		
15	SPARE		
16	SPARE		

ANALOG OUTPUT BOARD #02

AO#	POINT DESCRIPTION	EQUIPMENT	AREA SERVED
17	SPARE		
18	SPARE		
19	SPARE		
20	SPARE		
21	SPARE		
22	MA DAMPER	RTU-3	OFFICE
23	HW VALVE	RHC	PRINCIPAL B130
24	HW VALVE	RHC	CLERICAL B128
25	HW VALVE	RCP	PRINCIPAL B130
26	HW VALVE	RHC	OFFICE A112
27	HW VALVE	RHC	CAFE A105
28	HW VALVE	RHC	LOBBY A109
29	SPARE		
30	SPARE		
31	SPARE		
32	SPARE		

DIGITAL OUTPUT BOARD #01

DO#	POINT DESCRIPTION	EQUIPMENT	AREA SERVED
17	FCU ON/OFF	FCU	CONFERENCE ROOM
18	FCU ON/OFF	FCU	PLATFORM
19	PUMP ON/OFF	CP-3	BUILDING
20	PUMP ON/OFF	CP-4	BUILDING
21			
22	EF ON/OFF	EF	BUILDING
23	S.FAN ON/OFF	RTU-3	OFFICE
24	SPARE		
25	SPARE		
26	SPARE		
27	SPARE		
28	SPARE		
29	SPARE		
30	SPARE		
31	SPARE		
32	SPARE		

ANCHOR BAY SCHOOL DISTRICT
DEAN VALDRETT ELEMENTARY SCHOOL

SYSTEM:
POINT TERMINATIONS

LAN 2

CTI CONTROLLED TEMPERATURE INC.
1897 BEST DRIVE, WALLED LAKE MICH. 48390 TEL. (248) 669-0500

FILE NAME: ABDN0202
ASBUILT BY: KDS DATE: 10-22-00 JOB NO. 98-253

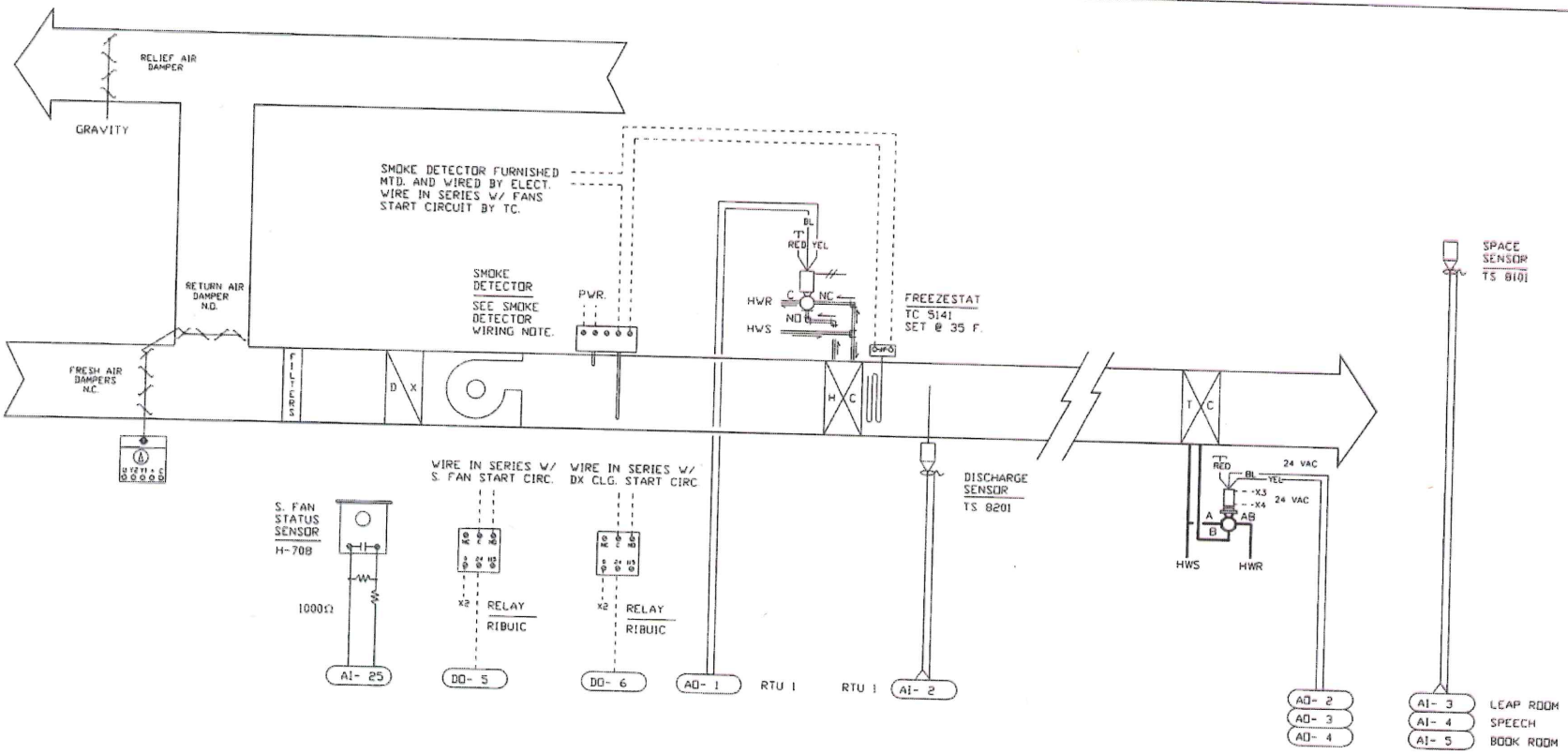

SUPPLY FAN STARTER WIRING

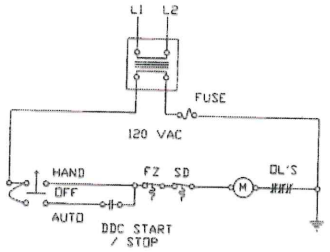

INCLUDE IN BASE BID

ANCHOR BAY SCHOOL DISTRICT
DEAN NALDRETT ELEMENTARY SCHOOL

SYSTEM: RTU-1 CONTROL WIRING

LAN ADDRESS 02

CTI CONTROLLED TEMPERATURE INC.
1897 BEST DRIVE, WALLED LAKE MICH. 48390 TEL. (248) 669-0500

FILE NAME: ABDN0203A RTU-1 WIRING

ASBUILT BY: KDS DATE: 10-22-01 JOB NO. 00-138

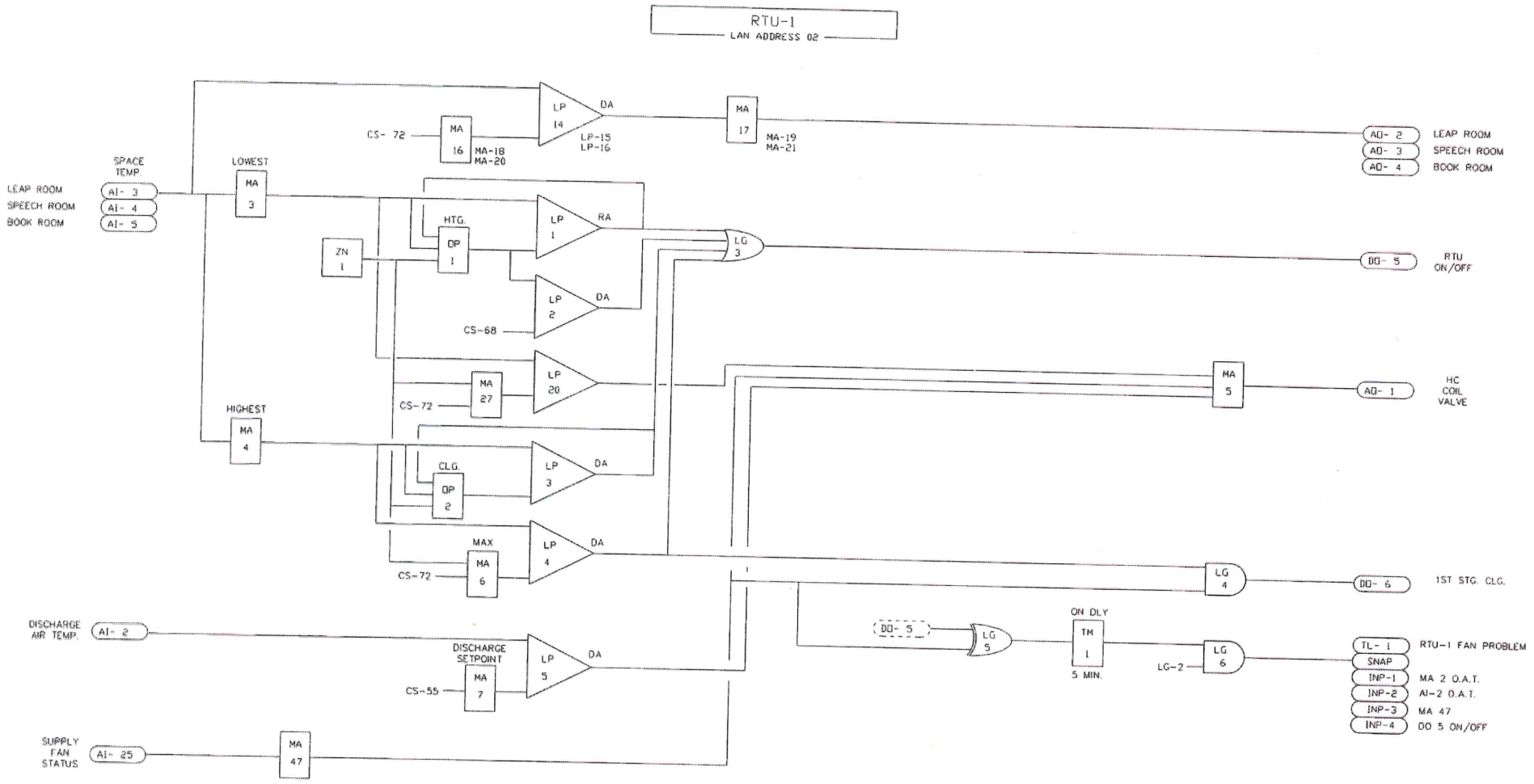

INCLUDE IN BASE BID

ANCHOR BAY SCHOOL DISTRICT *DEAN NALDRETT ELEMENTARY SCHOOL*	SYSTEM: RTU-1 CONTROL SOFTWARE LAN ADDRESS 02	CTI CONTROLLED TEMPERATURE INC. 1897 BEST DRIVE , WALLED LAKE MICH. 48390 TEL. (248) 669-0500 FILE NAME: ABDN0203 RTU-1 CONTROL SOFTWARE ASBUILT BY: KDS DATE: 10-22-01 JOB NO. 00-138

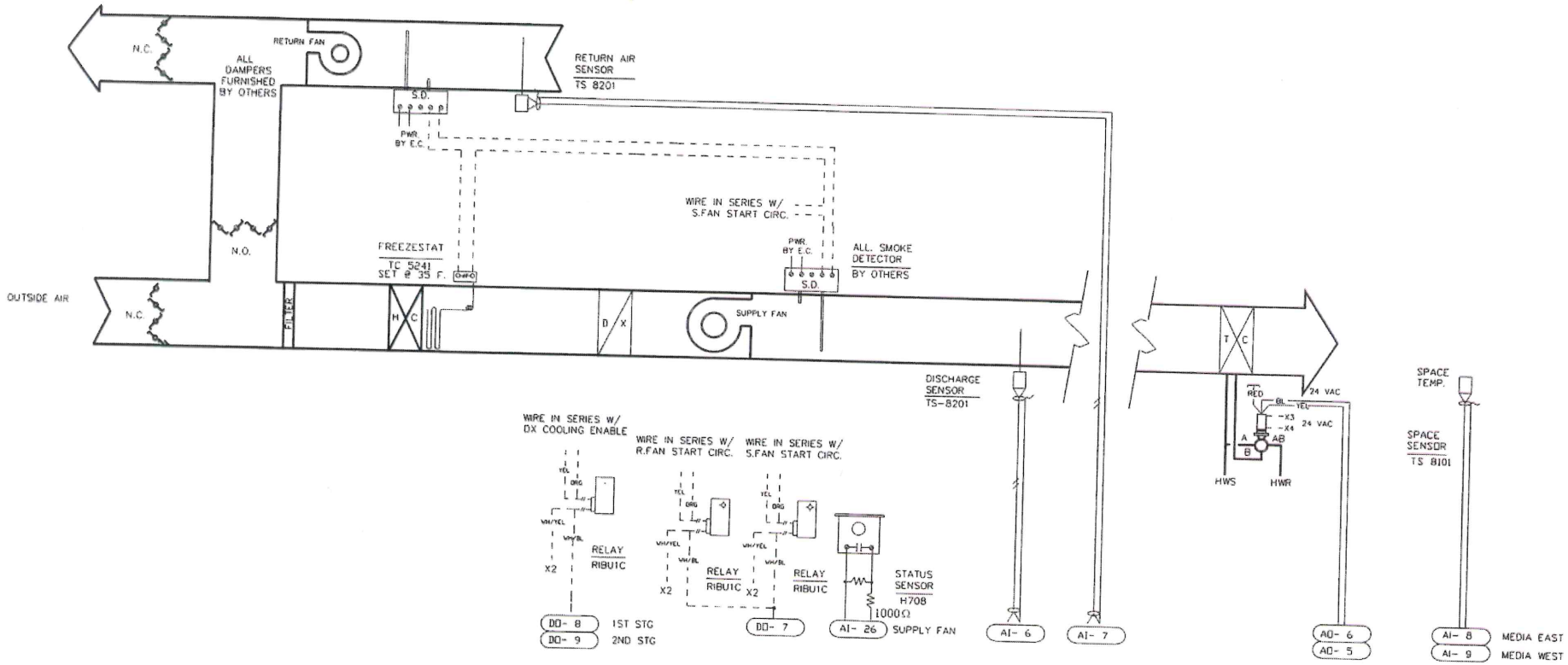

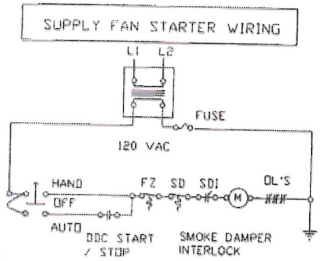

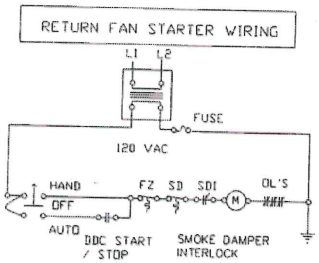

INCLUDE IN BASE BID

ANCHOR BAY SCHOOL DISTRICT *DEAN NALDRETT ELEMENTARY SCHOOL*	SYSTEM: ROOF TOP UNIT # 2 CONTROL DIAGRAM LAN ADDRESS 02 SERVES THE MEDIA CENTER	CTI CONTROLLED TEMPERATURE INC. 1897 BEST DRIVE , WALLED LAKE MICH. 48390 TEL. (248) 669-0500 FILE NAME: ABDN0204 RTU-2 CONTROL DIAGRAM ASBUILT BY: KDS DATE: 10-22-01 JOB NO. 98-253

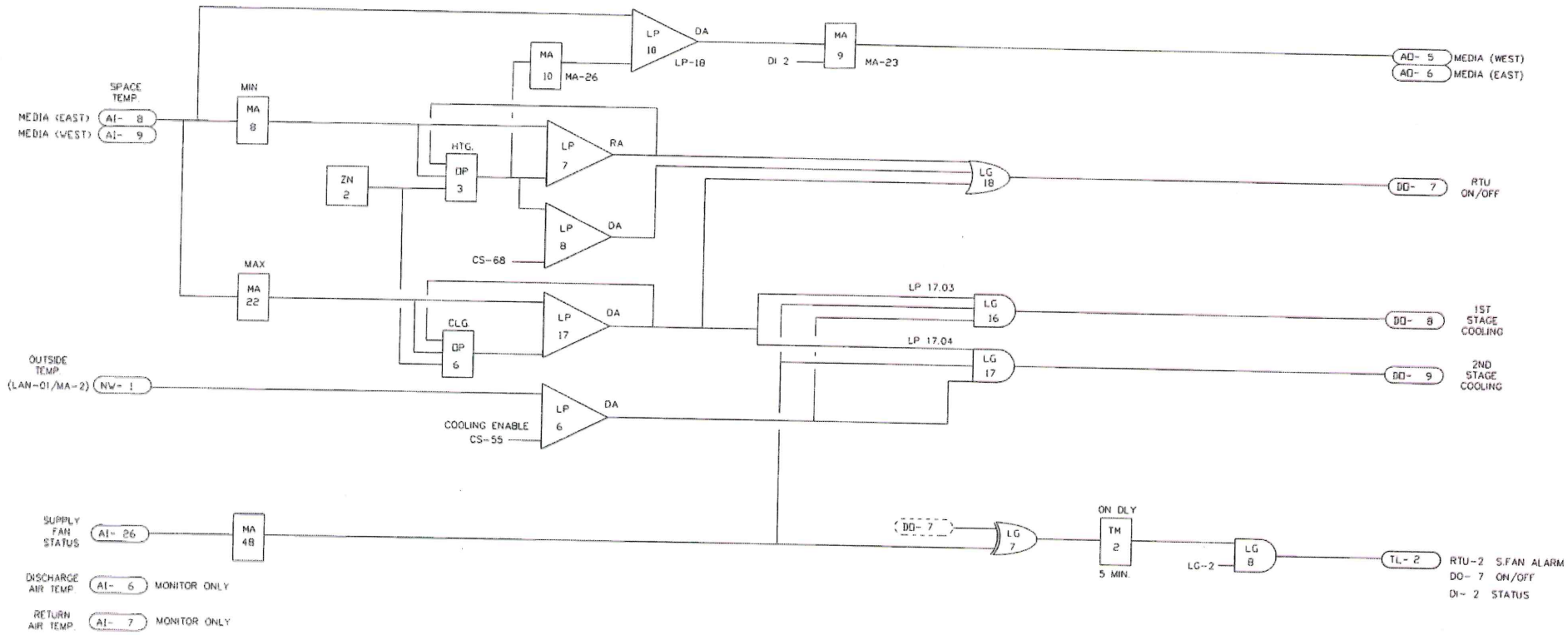

INCLUDE IN BASE BID

ANCHOR BAY SCHOOL DISTRICT
DEAN NALDRETT ELEMENTARY SCHOOL

SYSTEM: RTU-2 CONTROL SOFTWARE

LAN ADDRESS 02

CTI CONTROLLED TEMPERATURE INC.
1897 BEST DRIVE . WALLED LAKE MICH. 48390 TEL. (248) 669-0580

FILE NAME: ABDN00205 RTU-2 CONTROL SOFTWARE
ASBUILT BY: KDS DATE: 10-22-01 JOB NO. 98-253

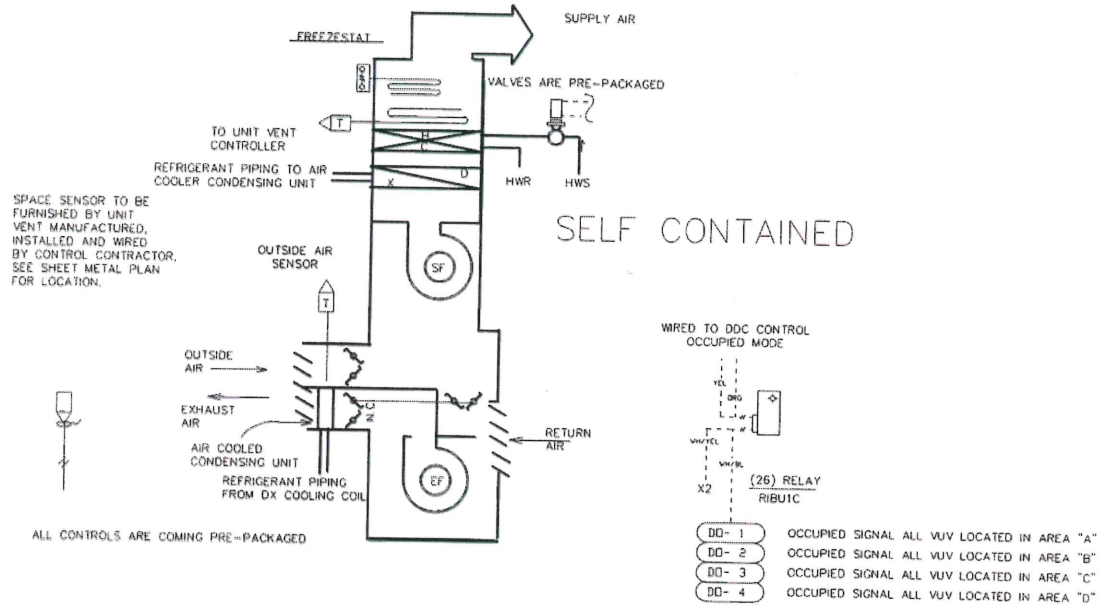

SEQUENCE OF OPERATION

TYPICAL VERTICAL UNIT VENTILATOR CONTROL.

TYPICAL VERTICAL UNIT VENTILATOR CONTROL

1. THE DDC SYSTEM WILL ISSUE A COMMAND TO THE UNIT VENTILATOR CONTROLLER TO ENERGIZE OR DE-ENERGIZE THE OCCUPIED OR UNOCCUPIED MODE.

2. PRE-PACKAGED SELF CONTAINED UNIT

UNIT VENTILATOR DAY/NIGHT CHANGE-OVER SOFTWARE

LAN ADDRESS 02

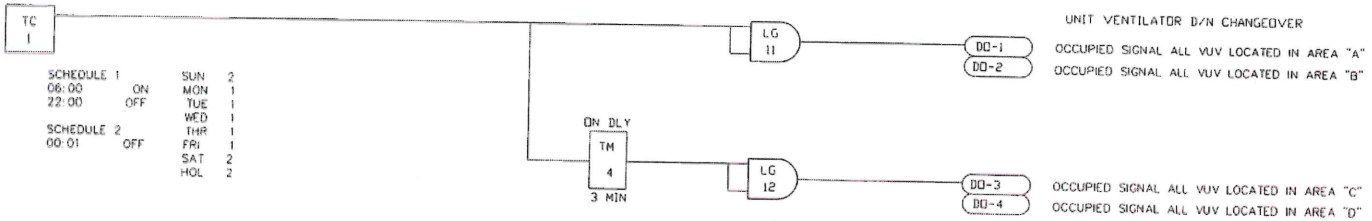

INCLUDE IN BASE BID

ANCHOR BAY SCHOOL DISTRICT *DEAN NALDRETT ELEMENTARY SCHOOL*	SYSTEM: VERTICAL UNIT VENTILATOR CONTROL DIAGRAM. LAN 02	CTI CONTROLLED TEMPERATURE INC. 1897 BEST DRIVE , WALLED LAKE MICH. 48390 TEL (248) 669-0500 FILE NAME: ABDN0206 U/V SOFTWARE ASBUILT BY: LMF? DATE: 6-13-00 JOB NO. 98-253

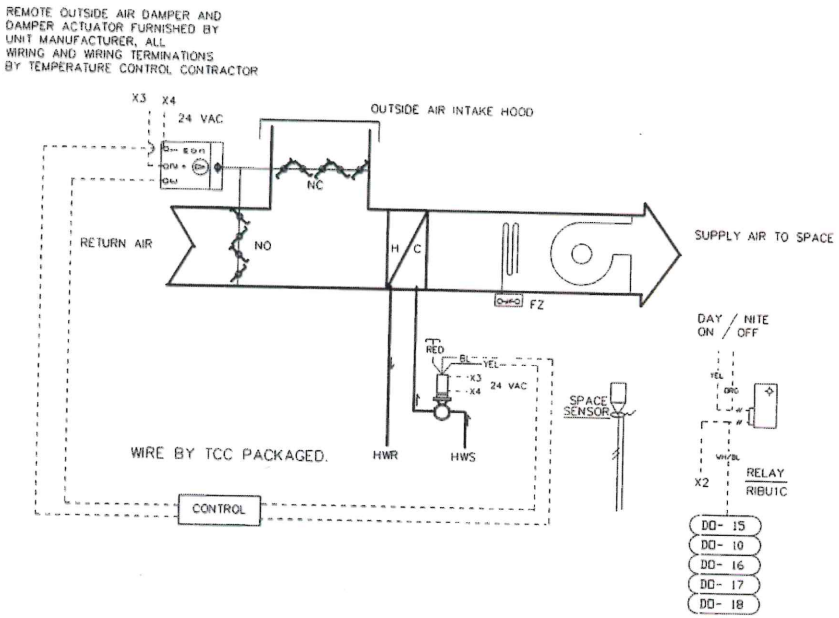

SEQUENCE OF OPERATION

TYPICAL HORIZONTAL FAN COIL CONTROL "SELF CONTAINED CONTROLS"

1. THE DDC SYSTEM WILL ISSUE COMMAND TO THE COIL UNIT CONTROLLER TO ENERGIZE OR DE-ENERGIZE THE UNOCCUPIED OR OCCUPIED MODE. DURING THE OCCUPIED MODE THE UNIT VENTILATOR SHALL BE STARTED AND SHALL RUN CONTINUOUSLY.

2. DURING THE UNOCCUPIED PERIOD THE FAN COIL UNITS WILL CYCLE IN FULL RECIRCULATION MODE TO MAINTAIN NIGHT SET BACK TEMPERATURE AS DETERMINED THROUGH THE UNIT VENT DDC CONTROLLER AND THE RELIEF DAMPER SHALL BE FULLY CLOSED.

HORIZONTAL FAN COIL DAY/NIGHT CHANGE-OVER SOFTWARE

LAN ADDRESS 04

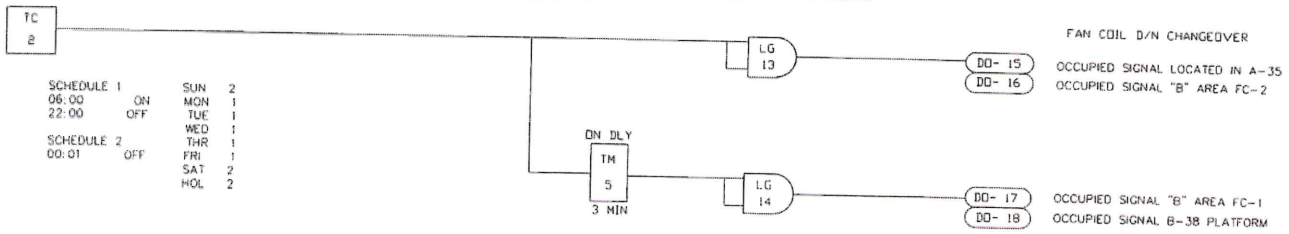

INCLUDE IN BASE BID

ANCHOR BAY SCHOOL DISTRICT *DEAN NALDRETT ELEMENTARY SCHOOL*	SYSTEM: TYPICAL HORIZONTAL FAN COIL CONTROL 5 LIKE THIS. LOCATED IN AREAS "A","B","C"	CTI CONTROLLED TEMPERATURE INC. 1897 BEST DRIVE . WALLED LAKE MICH. 48390 TEL. (248) 669-0500 FILE NAME: ABDN0207 CHANGEOVER SOFTWARE ASBUILT BY: KDS DATE: 10-22-01 JOB NO. 98-253

REMOTE OUTSIDE AIR DAMPER AND
DAMPER ACTUATOR FURNISHED BY
UNIT MANUFACTURER, ALL
WIRING AND WIRING TERMINATIONS
BY TEMPERATURE CONTROL CONTRACTOR

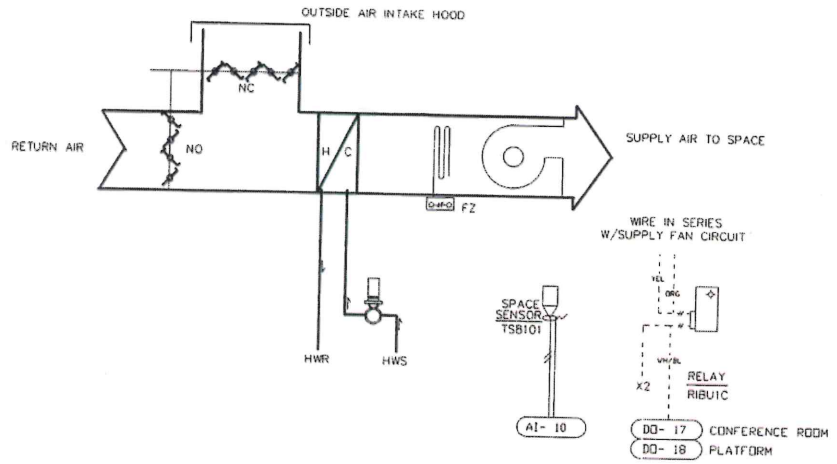

SEQUENCE OF OPERATION

TYPICAL HORIZONTAL FAN COIL CONTROL "SELF CONTAINED CONTROLS"

1. THE DDC SYSTEM WILL ISSUE COMMAND TO THE COIL UNIT CONTROLLER TO ENERGIZE OR DE-ENERGIZE THE UNOCCUPIED OR OCCUPIED MODE. DURING THE OCCUPIED MODE THE UNIT VENTILATOR SHALL BE STARTED AND SHALL RUN CONTINUOUSLY.

2. DURING THE UNOCCUPIED PERIOD THE FAN COIL UNITS WILL CYCLE IN FULL RECIRCULATION MODE TO MAINTAIN NIGHT SET BACK TEMPERATURE AS DETERMINED THROUGH THE UNIT VENT DDC CONTROLLER AND THE RELIEF DAMPER SHALL BE FULLY CLOSED.

INCLUDE IN BASE BID

ANCHOR BAY SCHOOL DISTRICT *DEAN NALDRETT ELEMENTARY SCHOOL*	SYSTEM: TYPICAL HORIZONTAL FAN COIL CONTROL	CTI CONTROLLED TEMPERATURE INC. 1897 BEST DRIVE , WALLED LAKE MICH. 48390 TEL. (248) 669-0500
	LAN ADDRESS 02	FILE NAME: ABDN0207B
	SERVES CONF. ROOM & PLATFORM	ASBUILT BY: TJN DATE: 10-22-01 JOB NO. 98-253

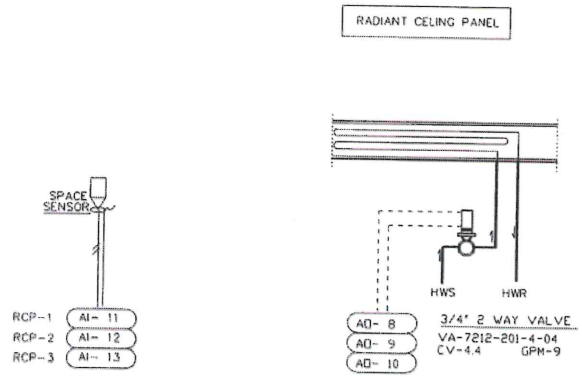

SEQUENCE OF OPERATION

RADIANT CELING PANEL

THE RADIANT CELING PANEL CONTROL VALVE AND HEATING COIL CONTROL VALVE SHALL BE MODULATED THROUGH THE UNIT VENTILATOR CONTROLLER.

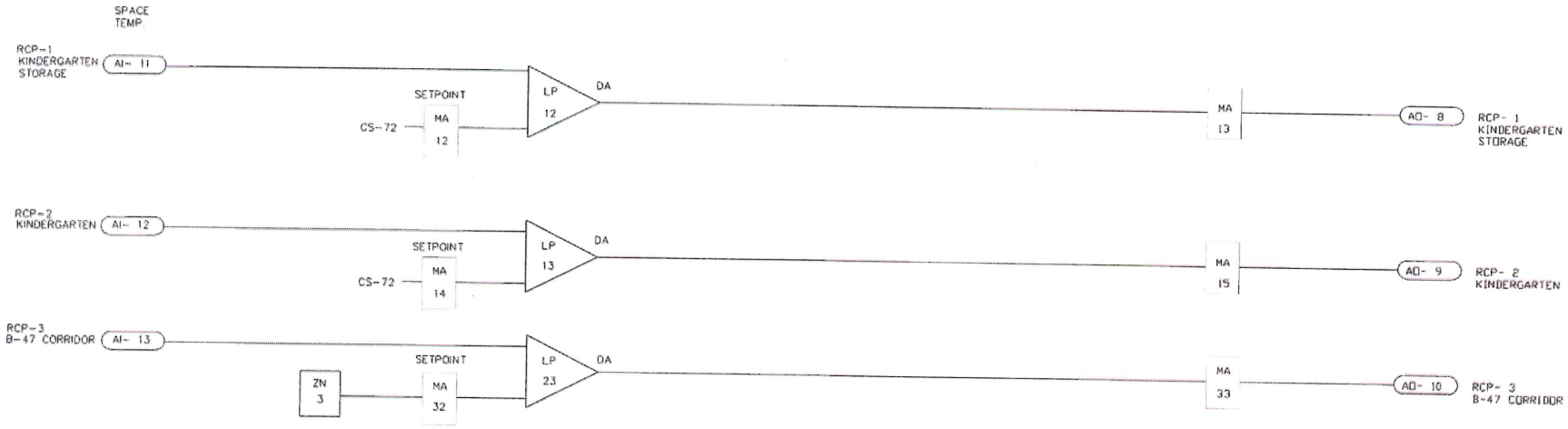

INCLUDE IN BASE BID

ANCHOR BAY SCHOOL DISTRICT *DEAN NALDRETT ELEMENTARY SCHOOL*	SYSTEM: RADIANT CELING PANEL LAN 2	CTI CONTROLLED TEMPERATURE INC. 1897 BEST DRIVE . WALLED LAKE MICH. 48390 TEL. (248) 669-0500 FILE NAME: ABDNO208 RADIANT PANEL SOFTWARE ASBUILT BY: LMF? DATE: 6-13-00 JOB NO. 98-253

EXHAUST FAN CONTROL DIAGRAM

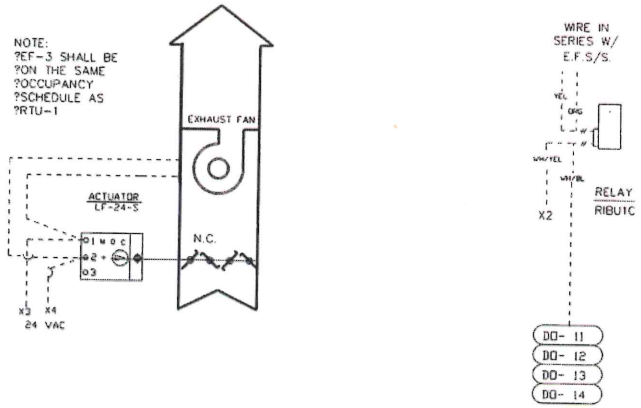

EXHAUST FAN CONTROL LOGIC

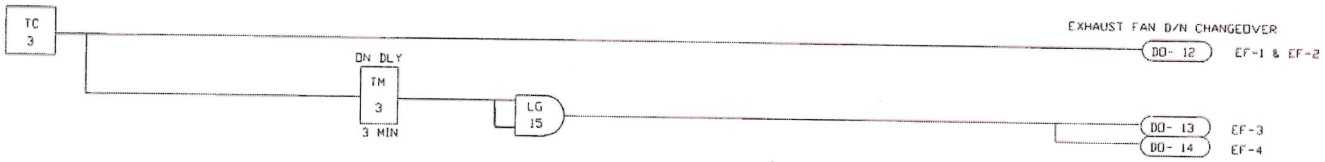

INCLUDE IN BASE BID

ANCHOR BAY SCHOOL DISTRICT *DEAN NALDRETT ELEMENTARY SCHOOL*	SYSTEM: EXHAUST FAN CONTROL DIAGRAM LAN 02	CTI CONTROLLED TEMPERATURE INC. 1897 BEST DRIVE , WALLED LAKE MICH. 48390 TEL. (248) 669-0500 FILE NAME: ABDN0209 EXHAUST FAN ASBUILT BY: LMF? DATE: 6-13-00 JOB NO. 98-253

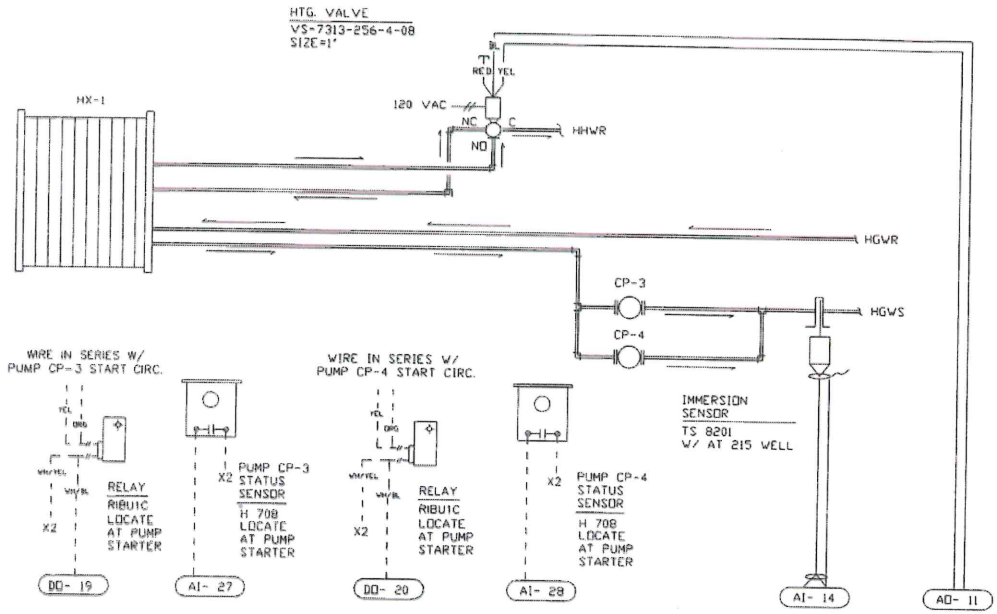

SEQUENCE OF OPERATION

PLATE AND FRAME HEAT EXCHANGER HX-1 CONTROL

1. THE HOT GLYCOL HEATING CIRCULATING PUMPS CP-3 AND CP-4 MOTOR STARTER HAND/OFF/AUTO SWITCHES ARE TO BE PLACED IN THE "AUTO" POSITION.

2. ONE CIRCULATING PUMP (CP-3 OR CP-4) WILL BE DESIGNATED AS THE "LEAD" PUMP AND THE OTHER PUMP WILL BE DESIGNATED AS THE "STANDBY" PUMP THROUGH OPERATOR INTERFACE TO THE DDC SYSTEM. THE "LEAD" PUMP WILL BE ENERGIZED THROUGH THE DDC SYSTEM AND WILL RUN CONTINUOUSLY WHENEVER ANY OF THE BOILER PRIMARY PUMPS ARE ENERGIZED.

3. THE HOT GLYCOL HEATING CIRCULATING PUMPS ON/OFF STATUS WILL BE PROVEN TO THE DDC SYSTEM BY MEANS OF THE PUMP MOTOR CURRENT SWITCH. IF THE "LEAD" PUMP HAS FAILED AS SENSED BY THE PUMP MOTOR CURRENT SWITCH, THE DDC SYSTEM WILL AUTOMATICALLY ENERGIZE THE "STANDBY" PUMP AND INDICATE A PUMP FAILURE ALARM. ONLY ONE PUMP WILL RUN AT ANY TIME. THE LEAD PUMP AND STANDBY PUMP WILL BE ALTERNATED EVERY 1000 HOURS THROUGH THE DDC SYSTEM.

4. THE HOT GLYCOL HEATING SUPPLY (HGHS) TEMPERATURE SENSOR, THROUGH DDC, WILL MODULATE THE 3-WAY MIXING CONTROL VALVE TO MAINTAIN HOT GLYCOL HEATING SUPPLY TEMPERATURE SETPOINT. THE HOT WATER HEATING SUPPLY TEMPERATURE WILL BE RESET BASED ON THE OUTSIDE AIR TEMPERATURE RESET SCHEDULE.

TYPICAL HGHW PUMP STARTER WIRING

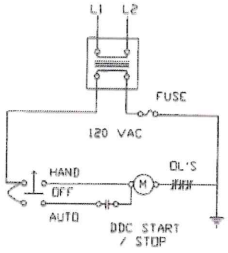

INCLUDE IN BASE BID

ANCHOR BAY SCHOOL DISTRICT *DEAN NALDRETT ELEMENTARY SCHOOL*	SYSTEM HEAT EXCHANGER CONTROL WIRING LAN 2	CTI CONTROLLED TEMPERATURE INC. 1897 BEST DRIVE . WALLED LAKE MICH. 48390 TEL. (248) 669-0500 FILE NAME: ABDN0210 HEAT EXCHANGER SOFTWARE ASBUILT BY: TJN DATE: 6-13-00 JOB NO. 98-253

HEAT EXCHANGER CONTROL SOFTWARE

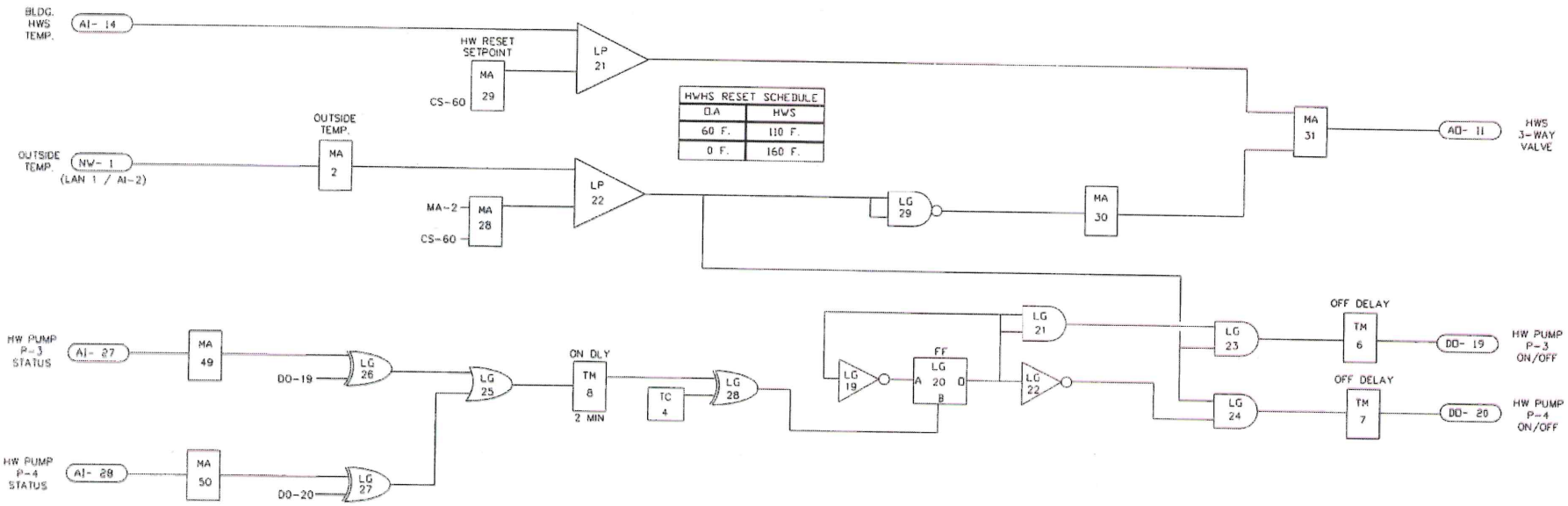

HWHS RESET SCHEDULE	
O.A	HWS
60 F.	110 F.
0 F.	160 F.

INCLUDE IN BASE BID

ANCHOR BAY SCHOOL DISTRICT
DEAN NALDRETT ELEMENTARY SCHOOL

SYSTEM: HEAT EXCHANGER CONTROL SOFTWARE

LAN 2

CTI CONTROLLED TEMPERATURE INC.
1897 BEST DRIVE . WALLED LAKE MICH. 48390 TEL. (248) 669-0500

FILE NAME: ABDN0210 HEAT EXCHANGER SOFTWARE

ASBUILT BY: TJN DATE: 6-13-00 JOB NO. 98-253

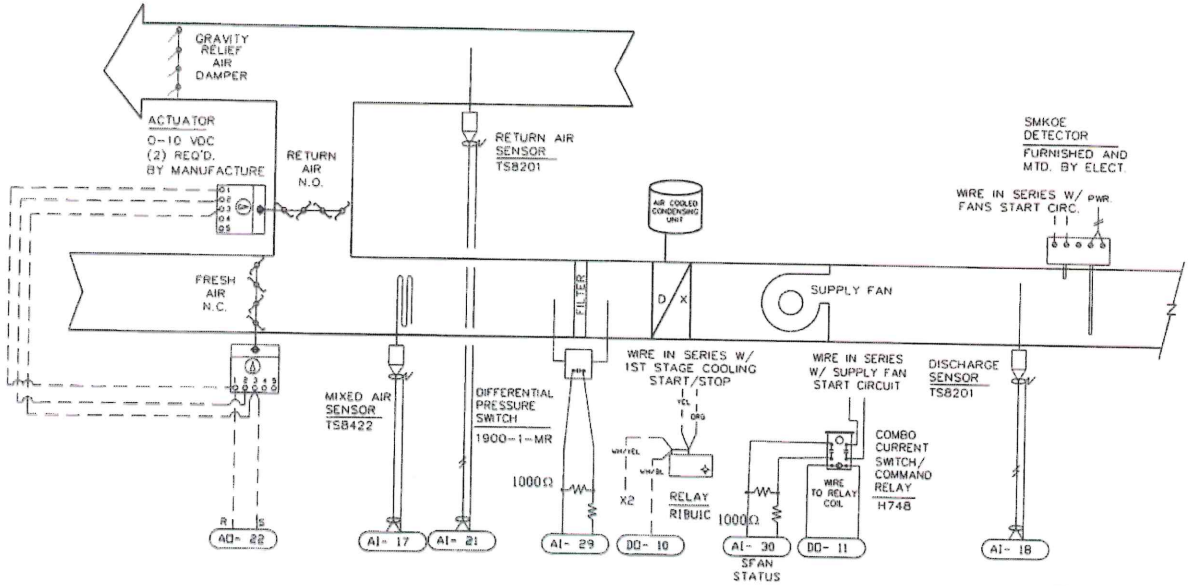

RADIANT CEILING PANEL CONTROL WIRING DIAGRAM

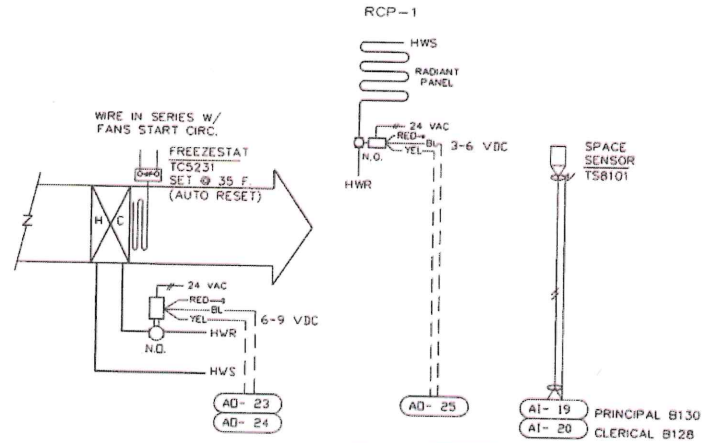

THESE BOXES ARE SERVED BY AHU-4		
OFFICE A112	AO- 26	AI- 22
CAFE A105	AO- 27	AI- 23
LOBBY A109	AO- 28	AI- 24

SEQUENCE OF OPERATION

WITH THE SUPPLY FAN MOTOR STARTER HAND/OFF/AUTO SWITCH IN THE "AUTO" POSITION, THE SUPPLY FAN WILL BE AUTOMATICALLY STARTED AND STOPPED BASED ON THE OPTIMUM START PROGRAM AND THE OCCUPANCY SCHEDULE AS PROGRAMMED THROUGH THE DIRECT DIGITAL CONTROL SYSTEM (DDC).

DURING THE UNOCCUPIED MODE, THE SUPPLY FAN WILL BE CYCLED "ON" AND "OFF" BY THE NIGHT CYCLE PROGRAM TO MAINTAIN SPACE TEMPERATURE ABOVE 60°F. (ADJ.)

IF THE SUPPLY FAN IS STARTED PRIOR TO THE OCCUPANCY HOUR BY THE OPTIMUM START PROGRAM OR DURING THE NIGHT CYCLE, THE OUTSIDE AIR DAMPER WILL REMAIN CLOSED. THE RETURN AIR DAMPER WILL BE FULLY OPEN.

WHEN THE SUPPLY FAN IS STARTED DURING THE OCCUPANCY PERIOD, THE OUTSIDE AIR DAMPERS WILL OPEN TO MINIMUM POSITION.

PROOF OF FLOW STATUS FOR THE SUPPLY FAN WILL BE PROVEN TO THE DDC SYSTEM BY MEANS OF THE FAN MOTOR CURRENT SWITCH.

THE DISCHARGE AIR TEMPERATURE SENSOR THROUGH DDC WILL MODULATE THE OUTSIDE AIR DAMPER AND THE RETURN AIR DAMPER TO MAINTAIN A DISCHARGE AIR TEMPERATURE SET POINT. THE DISCHARGE AIR TEMPERATURE SET POINT WILL BE 55°F. (ADJ.) WHENEVER THE OUTSIDE AIR TEMPERATURE IS 25°F. OR ABOVE AND THE DISCHARGE AIR TEMPERATURE SET POINT WILL BE 60°F. (ADJ.) WHENEVER THE OUTSIDE AIR TEMPERATURE IS 25°F. OR BELOW (ADJ.).

WHEN HOT WATER HEATING IS AVAILABLE, AS SENSED BY THE BOILER OPERATOR THROUGH THE DDC SYSTEM, THE ZONE SPACE TEMPERATURE SENSOR FURTHEST BELOW ITS SET POINT OF 75°F. (ADJ.) WILL CONTROL THE STAGES OF DIRECT EXPANSION (DX) COOLING TO MAINTAIN SPACE TEMPERATURE. WHEN HOT WATER HEATING IS NOT AVAILABLE, AS SENSED BY THE BOILER OPERATOR THROUGH THE DDC SYSTEM, THE AVERAGE ZONE SPACE TEMPERATURE WILL CONTROL THE STAGES OF THE DX COOLING TO PREVENT THE AVERAGE SPACE TEMPERATURE FROM EXCEEDING 75°F. (ADJ.).

THE ZONE SPACE TEMPERATURE SENSOR, THROUGH DDC, WILL MODULATE ITS RESPECTIVE HOT WATER TEMPERING COIL VALVE TO MAINTAIN SPACE TEMPERATURE SET POINT.

FILTER DIFFERENTIAL PRESSURE SWITCH WILL ISSUE A DIRTY FILTER ALARM IF ITS SET POINT IS REACHED.

IF SMOKE IS DETECTED IN THE AIR STREAM BY A SMOKE DETECTOR, THE SUPPLY FAN WILL BE DE-ENERGIZED.

IF THE SET POINT OF A FREEZESTAT IS REACHED, THE SUPPLY FAN WILL BE DE-ENERGIZED.

WHEN THE SUPPLY FAN IS DE-ENERGIZED, THE OUTSIDE AIR DAMPER WILL CLOSE AND THE RETURN AIR DAMPER WILL OPEN AND THE DX COOLING WILL BE DE-ENERGIZED.

SUPPLY FAN MOTOR STARTER WIRING

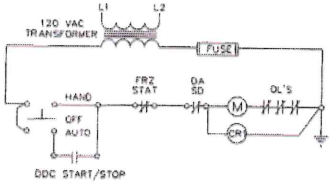

HW VALVE SCHEDULE							
UNIT	PART NO.	CONFIG.	SIZE	CV	GPM	WPD(V)	WPD(C)
HC-7	VS7211-201-4-02	2-WAY	1/2"	1.3	1.8	1.38"	1.6'
HC-8	VS7211-201-4-02	2-WAY	1/2"	1.3	2.8	4.6"	0.9'
HC-9	VS7211-201-4-02	2-WAY	1/2"	1.3	0.6	.21"	0.2'

NOTE: CONTROL VALVE PRESSURE DROP WILL EQUAL 2.5 TIMES THE ASSOCIATED COIL WATER PRESSURE DROP. (MIN. 2.3' MAX. 15')

RADIANT CEILING PANEL HW VALVE SCHEDULE							
UNIT	PART NO.	CONFIG.	SIZE	CV	GPM	WPD(V)	WPD(C)
RCP-1	VS-7211-201-4-01	2-WAY	1/2"	0.4	1.0	6.25"	3.8'

NOTE: CONTROL VALVE PRESSURE DROP WILL EQUAL 2.5 TIMES THE ASSOCIATED COIL WATER PRESSURE DROP. (MIN. 2.3' MAX. 15')

INCLUDE IN BASE BID

ANCHOR BAY SCHOOL DISTRICT
NALDRETT ELEMENTARY SCHOOL
ADDRESS: 47900 SUGARBUSH, NEW BALTIMORE, MI 48041

SYSTEM:
ROOFTOP UNIT 3 CONTROL WIRING DIAGRAM
LAN ADDRESS 02

CTI CONTROLLED TEMPERATURE INC.
1897 BEST DRIVE, WALLED LAKE MICH. 48390 TEL. (248) 669-0500

FILE NAME: RTU-3.dwg
DRAWN BY: KDS DATE: 10-22-01 JOB NO. 00-138

06A
PAGE NUMBER

ROOFTOP UNIT 3 CONTROL SOFTWARE DIAGRAM

LAN ADDRESS 02

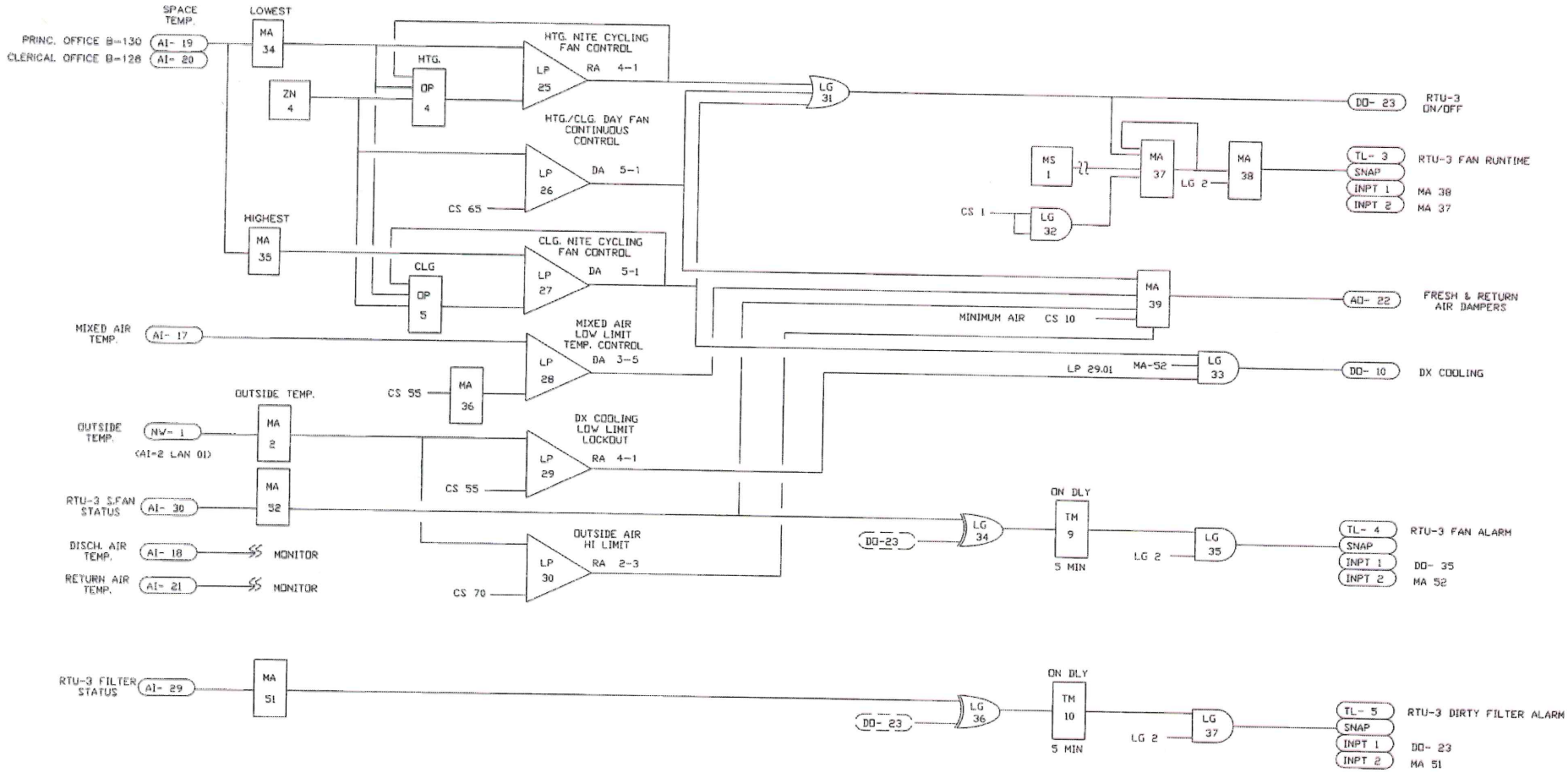

INCLUDE IN BASE BID

ANCHOR BAY SCHOOL DISTRICT *NALDRETT ELEMENTARY SCHOOL* ADDRESS: 47800 SUGARBUSH, NEW BALTIMORE, MI 48041	SYSTEM: ROOFTOP UNIT 3 CONTROL SOFTWARE DIAGRAM LAN ADDRESS 02	CTI CONTROLLED TEMPERATURE INC. 1697 BEST DRIVE, WALLED LAKE MICH. 48390 TEL. (248) 669-0500 FILE NAME: RTU-3.dwg DRAWN BY: KDS DATE: 05-30-02 JOB NO. 00-138	06B PAGE NUMBER

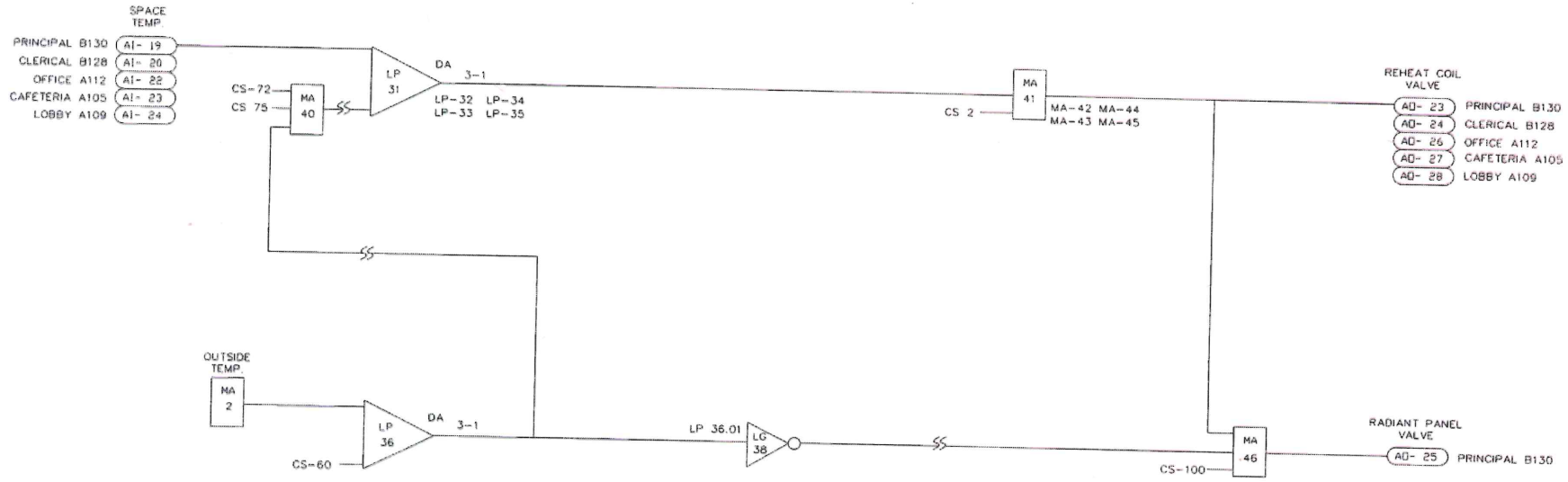

INCLUDE IN BASE BID

ANCHOR BAY SCHOOL DISTRICT *NALDRETT ELEMENTARY SCHOOL*	SYSTEM: RTU-3 TEMPERING COIL CONTROL SOFTWARE DIAGRAM	CTI CONTROLLED TEMPERATURE INC. 1897 BEST DRIVE , WALLED LAKE MICH. 48390 TEL. (248) 669-0500	13
ADDRESS:	LAN ADDRESS 02	FILE NAME: ABDN0213 TC LOGIC.dwg	
		DRAWN BY: KDS DATE: 10-10-01 JOB NO 00-138	PAGE NUMBER